Model	Year	MG	SG	Illustration	Restrictions	Update		
356	65	0	01	1-00		194	12:51	27.10.2005

Pos	Part Number	Name	Remarks	Qty	Model
		tool			
-	E 644 721 001 02	tool bag with contents comprising:		1	1600 /S90/C 1600 SC
-	E 644 721 001 12	tool bag with contents comprising:		1	CARRERA
-	E 644 721 010 01	tool bag		1	
-	644 721 221 01	rim wrench 19		1	
-	999 195 011 02	double-end spanner 8 X 9		1	
-	999 195 012 02	double-end spanner 10 X 11		1	
-	999 195 013 02	double-end spanner 12 X 14		1	
-	999 195 015 02	double-end spanner 17 X 19		1	
-	E 999 191 002 02	screw driver		1	
-	E 900 137 001 02	phillips screw driver B 2		1	
-	999 107 002 02	universal pliers 170 MM		1	
-	999 192 006 50	narrow v-belt		1	
-	E 644 722 201 01	tyre pressure gauge with bag		1	
-	N 020 112 1	ball seat nut ball seat nut A 14		1	
-	E 999 571 001 02	ring wrench 36		1	
-	E 644 721 013 00	bag with 5 fuse		1	
-	E 900 066 002 02	adjusting key hexagon socket head bolt 6		1	CARRERA
-	E 547 721 702 01	retaining bracket narrow v-belt		1	CARRERA

Model	Year	MG	SG	Illustration	Restrictions	Update		
356	65	0	01	1-00		194	12:51	27.10.2005

Pos	Part Number	Name	Remarks	Qty	Model
-	E 644 721 261 01	socket wrench with joint 12		1	CARRERA
-	E 644 721 262 01	socket wrench with bracket		1	CARRERA
-	644 721 201 03	spark plug wrench with pin		1	1600 /S90/C 1600 SC
-	E 999 571 025 02	spark plug wrench complete comprising:		1	CARRERA
-	E 999 571 026 02	ratchet spanner 3/8 "		1	CARRERA
-	E 999 571 027 02	extension 4 "		2	CARRERA
-	E 999 571 028 02	ball joint		1	CARRERA
-	E 999 571 029 02	double socket wrench		1	CARRERA
-	E 644 721 263 00	socket wrench 17		1	CABRIO HARDTOP
-	644 722 801 00	paint touch-up applicator please state the colour		X	
-	644 722 010 00	jack		1	
		- -- E N D -- -			

Model	Year	MG	SG	Illustration	Restrictions	Update		
356	65	0	01	1-05		194	12:51	27.10.2005

Pos	Part Number	Name	Remarks	Qty	Model
		accessories			
-	E 644 631 090 00	box with bulbs 6 VOLT		1	
-	E 644 801 010 02	luggage rack with belt		1	
-	E 644 801 951 01	belt for luggage rack		4	
-	644 802 951 00	belt for luggage rack		X	
		- -- E N D -- -			

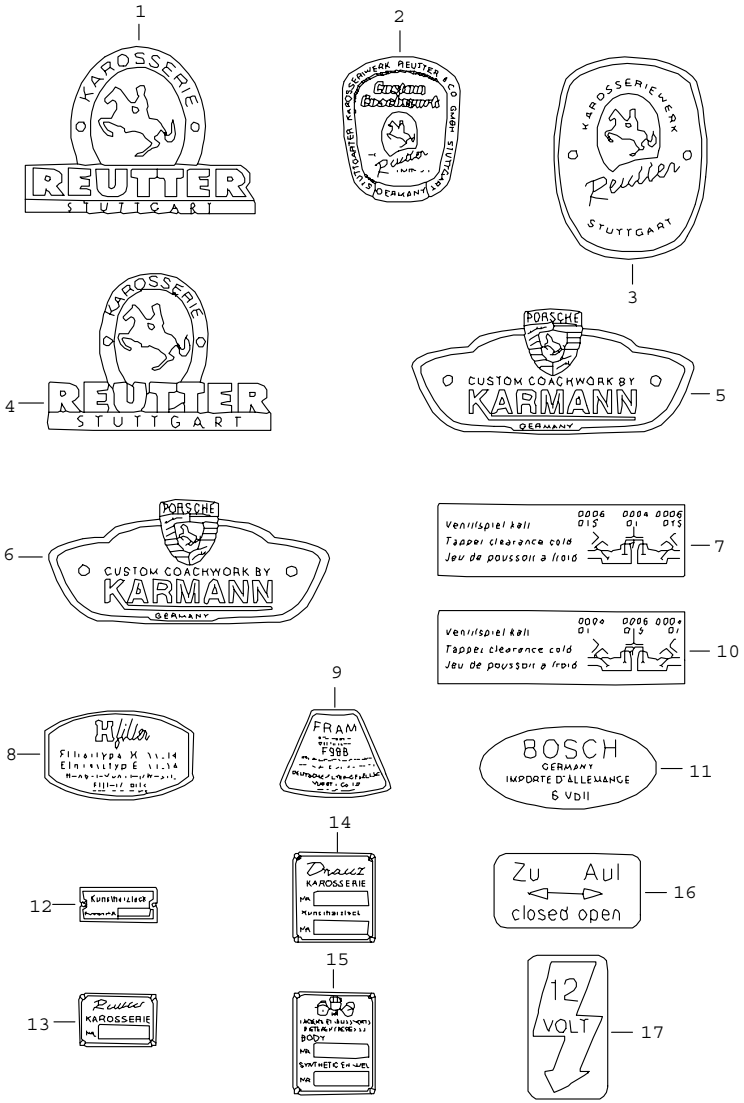

Pos		Part Number	Name	Remarks	Qty	Model
			badge sticker			
1		PCG 723 002 00	badge		X	
2		PCG 723 003 00	badge		X	
3		PCG 723 004 00	badge		X	
4		PCG 723 001 00	badge		X	
5	E	PCG 723 011 00	badge		X	
6		PCG 723 008 00	badge		X	
7		546 72 203	decal label		X	
8		PCG 701 003 00	sticker		X	
9		PCG 701 009 00	sticker		X	
10		PCG 701 015 00	sticker		X	
11		PCG 701 008 00	sticker		X	
12		PCG 701 102 00	badge		X	
13		PCG 701 103 00	badge		X	
14		PCG 701 104 00	badge		X	
15		PCG 701 106 00	badge		X	
16	E	PCG 701 587 00	sticker		X	
17		PCG 701 833 00	sticker		X	
-		PCG 723 012 00	badge MADE IN GERMANY		X	
			- -- E N D -- -			

Model	Year	MG	SG	Illustration	Restrictions	Update	12:52	27.10.2005	PORSCHE	PET	PORSCHE
356	65	1	01	101-05		194					

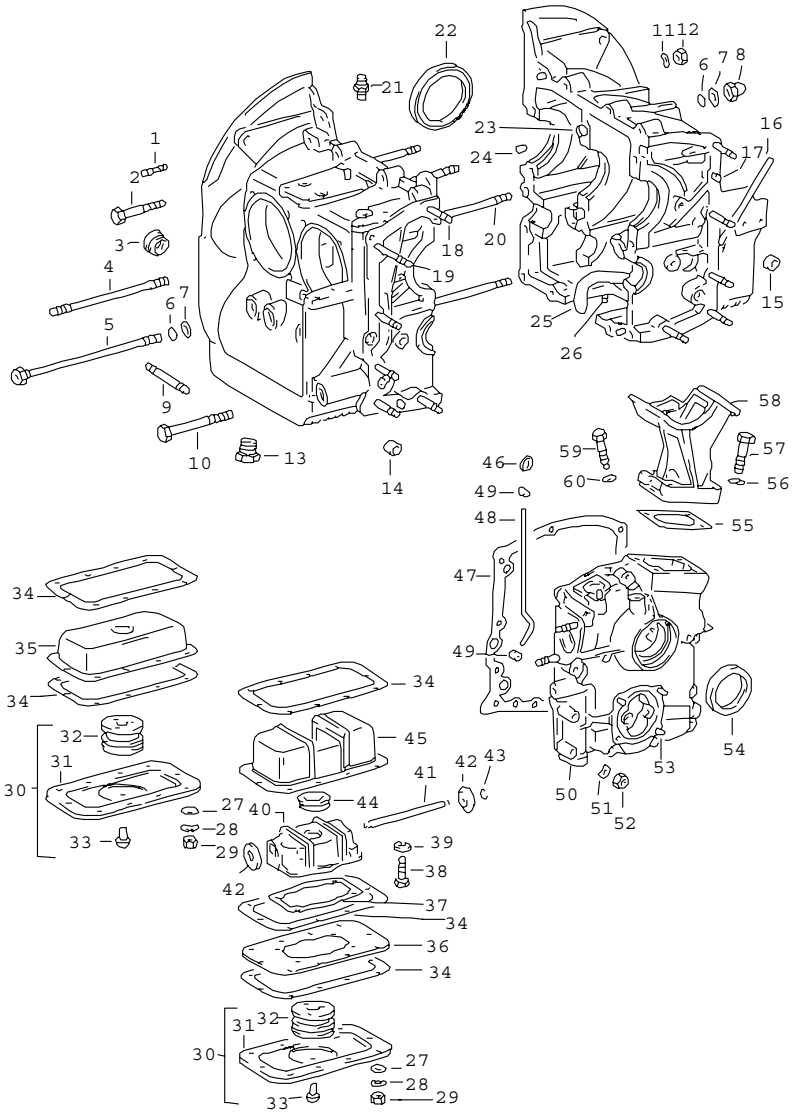

Pos	Part Number	Name	Remarks	Qty	Model
		crankcase			1600-SC
-	616 100 134 00	crankcase with housing cover and with studs without bearing 4		1	
		M >> 601 994			1600
		M >> 085 940			1600 S
		M >> 800 149			1600 S90
		M >> 601 994			1600
		M >> 085 940			1600 S
		M >> 800 149			1600 S90
-	616 100 133 00	crankcase with housing cover and with studs without bearing 4		1	
		M >> 601 994			1600
		M >> 085 940			1600 S
		M >> 800 149			1600 S90
		M >> 601 994			1600
		M >> 085 940			1600 S
		M >> 800 149			1600 S90
-	616 100 133 01	crankcase with housing cover and with studs without bearing 4		1	
		M 601 995 >>			1600
		M 085 941 >>			1600 S
		M 800 150 >>			1600 S90
		M 713 789 >>			1600 C
		M 812 210 >>			1600 SC
		not for (D)(S)			
		M 732 048 >>			(D)(S)1600 C
		M 821 040 >>			(D)(S) 1600 SC
		M 610 755 >>			1600
		M 700 590 >>			1600 S

Pos	Part Number	Name	Remarks	Qty	Model
		M 800 526 >>			1600 S90
		not for			
		(D)(S)			
		M 611 118 >>			(D)(S):1600
		M 706 801 >>			(D)(S):
					1600 S
		M 807 187 >>			(D)(S):
					1600 S90
		M 610 755 >>			1600
		M 700 590 >>			1600 S
		M 800 526 >>			1600 S90
		not for			
		(D)(S)			
		M 611 118 >>			(D)(S):1600
		M 706 801 >>			(D)(S):
					1600 S
		M 807 187 >>			(D)(S):
					1600 S90
					1600 C/SC
		M 610 755 >>			1600
		M 700 590 >>			1600 S
		M 800 526 >>			1600 S90
		not for			
		(D)(S)			
		M 611 118 >>			(D)(S):1600
		M 706 801 >>			(D)(S):
					1600 S
		M 807 187 >>			(D)(S):
					1600 S90
					1600C/SC
		M 601 995 >>			1600
		M 085 941 >>			1600 S
		M 800 941 >>			1600 S90
		M 601 995 >>			1600
		M 085 941 >>			1600 S
		M 800 150 >>			1600 S90
-	616 100 133 02	crankcase		1	
		with			
		housing cover			
		and			
		with studs			
		without			
		bearing			
		4			
		M 610 755 >>			1600
		M 700 590 >>			1600 S
		M 800 526 >>			1600 S90
		not for			
		(D)(S)			
		M 611 118 >>			(D)(S):1600
		M 706 801 >>			(D)(S):
					1600 S
		M 807 187 >>			(D)(S):
					1600 S90
		M >> 713 788			1600 C
		M >> 812 209			1600 SC
		not for			
		(D)(S)			
		M >> 732 047			(D)(S):
					1600 C
		M >> 821 039			(D)(S):
					1600 SC
		M >> 601 994			1600
		M >> 085 940			1600 S
		M >> 800 149			1600 S90
		M 601 995 >>		4	1600
		M 085 941 >>			1600 S
		M 800 150 >>			1600 S90
-	616 100 133 03	crankcase		1	
		with			
		housing cover			
		and			
		with studs			
		without			
		bearing			
		4			
		M 601 995 >>			1600
		M 085 941 >>			1600 S
		M 800 150 >>			1600 S90
		M 713 789 >>			1600 C
		M 812 210 >>			1600 SC
		not for			
		(D)(S)			
		M 732 048 >>			(D)(S)1600 C
		M 821 040 >>			(D)(S)
					1600 SC
		M 610 755 >>			1600
		M 700 590 >>			1600 S
		M 800 526 >>			1600 S90
		not for			
		(D)(S)			
		M 611 118 >>			(D)(S):1600
		M 706 801 >>			(D)(S):
					1600 S
		M 807 187 >>			(D)(S):
					1600 S90
		M 610 755 >>			1600
		M 700 590 >>			1600 S
		M 800 526 >>			1600 S90
		not for			
		(D)(S)			
		M 611 118 >>			(D)(S):1600
		M 706 801 >>			(D)(S):
					1600 S
		M 807 187 >>			(D)(S):
					1600 S90
					1600 C/SC
		M 610 755 >>			1600

Pos	Part Number	Name	Remarks	Qty	Model
		M 700 590 >> M 800 526 >> not for (D)(S)			1600 S 1600 S90
		M 611 118 >> M 706 801 >>			(D)(S):1600 (D)(S): 1600 S
		M 807 187 >>			(D)(S): 1600 S90
		M 601 995 >> M 085 941 >> M 800 941 >> M 601 995 >> M 085 941 >> M 800 150 >>			1600C/SC 1600 1600 S 1600 S90 1600 1600 S 1600 S90
-	616 101 904 10	crankcase without cover		1	
-	E 999 501 051 30	plug for oil duct $ 8 MM		1	
-	E 999 501 012 30	plug for oil duct $ 10 MM		1	
-	E 539 01 107	plug for oil duct $ 12 MM		1	
-	E 999 501 019 30	plug for oil duct $ 16		1	
1	E 900 061 027 01	stud M 8 X 25 for cover camshaft		2	
2	N 010 360 6	hexagon-head bolt M 8 X 60		7	
3	539 01 132	cover for camshaft		1	
4	539 01 118	stud		16	
5	616 101 171 00	hexagon-head bolt tensioning device for crankcase		1	
6	999 701 006 40	o-ring		7	
7	616 101 191 00	washer		7	
8	E 999 070 004 02	cap nut		6	
9	539 01 114	stud for mount transmission		2	
10	N 010 388 3	hexagon-head bolt M 8 X 90		1	
11	N 012 241 1	spring washer B 8		10	
12	900 076 025 02	hexagon nut M 8		10	
13	539 01 133	drain plug		1	
14	616 01 123	rubber seal for oil duct		2	
15	539 01 122	rubber seal for oil duct		1	
16	E 539 07 748	guide tube for oil level dipstick		1	
17	999 012 006 00	straight pin		4	
18	000 95 105	stud		10	
19	000 95 106	stud		1	
20	539 01 119	stud for crankcase		4	
(20)	999 061 045 01	stud for crankshaft bearing 2		1	
21	900 105 001 02	screw socket LL 6 M		1	

Pos	Part Number	Name	Remarks	Qty	Model
22	999 113 029 50	radial sealing ring DG 60 X 80 X 10/1		1	
23	901 101 195 00	dowel sleeve		2	
24	539 01 110	straight pin		4	1600 /S
24	616 101 172 00	straight pin		1	1600 C/SC
25	E 616 01 121	oil tube		1	1600 /S/S90
25	616 101 377 00	oil tube		1	
		M 601 995 >>			1600
		M 085 941 >>			1600 S
		M 800 150 >>			1600 S90
		M 713 789 >>			1600 C
		M 812 210 >>			1600 SC
		not for			
		(D)(S)			
		M 732 048 >>			(D)(S)1600 C
		M 821 040 >>			(D)(S)
					1600 SC
		M 610 755 >>			1600
		M 700 590 >>			1600 S
		M 800 526 >>			1600 S90
		not for			
		(D)(S)			
		M 611 118 >>			(D)(S):1600
		M 706 801 >>			(D)(S):
					1600 S
		M 807 187 >>			(D)(S):
					1600 S90
		M 610 755 >>			1600
		M 700 590 >>			1600 S
		M 800 526 >>			1600 S90
		not for			
		(D)(S)			
		M 611 118 >>			(D)(S):1600
		M 706 801 >>			(D)(S):
					1600 S
		M 807 187 >>			(D)(S):
					1600 S90
					1600 C/SC
		M 610 755 >>			1600
		M 700 590 >>			1600 S
		M 800 526 >>			1600 S90
		not for			
		(D)(S)			
		M 611 118 >>			(D)(S):1600
		M 706 801 >>			(D)(S):
					1600 S
		M 807 187 >>			(D)(S):
					1600 S90
					1600 C/SC
25	616 101 377 00	oil tube		1	1600 C/SC
26	539 01 112	stud for cover		10	1600 /S
(26)	999 062 002 02	stud for cover		10	
27	N 011 524 7	washer 6,4		10	
28	900 028 008 01	spring washer B 6		10	
29	900 076 010 02	hexagon nut M 6		10	
31	539 01 150	cover		1	
32	E 616 101 333 00	filter element		1	
33	E 900 055 033 20	rivet 5 X 10		1	
34	539 01 152	gasket		2	1600 /S
34	539 01 152	gasket		3	1600 S90
35	616 101 380 00	oil strainer		1	1600 /S
35	616 101 380 00	oil strainer		1	
		M 610 755 >>			1600
		M 700 590 >>			1600 S
		M 800 526 >>			1600 S90
		not for			
		(D)(S)			
		M 611 118 >>			(D)(S):1600
		M 706 801 >>			(D)(S):
					1600 S
		M 807 187 >>			(D)(S):
					1600 S90
					1600 C/SC
36	E 616 101 372 00	intermediate plate only for racing		1	1600 S90

Pos	Part Number	Name	Remarks	Qty	Model
37	E 616 101 931 00	gasket only for racing		1	1600 S90
38	N 010 207 6	hexagon-head bolt M 5 X 12 only for racing		1	1600 S90
39	N 012 005 3	lock ring B 5 only for racing		4	1600 S90
40	E 616 101 373 00	housing only for racing		1	1600 S90
41	616 101 375 00	connecting rod only for racing		1	1600 S90
42	E 616 101 376 00	valve plate only for racing		2	1600 S90
43	900 116 002 01	lock washer 3,2 only for racing		1	1600 S90
44	E 616 101 932 00	gasket only for racing		1	1600 S90
45	E 616 101 038 00	oil strainer only for racing		1	1600 S90
46	539 04 203	sealing ring M 601 995 >> M 085 941 >> M 800 150 >> M 713 789 >> M 812 210 >> not for (D)(S) M 732 048 >> M 821 040 >> M 610 755 >> M 700 590 >> M 800 526 >> not for (D)(S) M 611 118 >> M 706 801 >> M 807 187 >>		1 1600 1600 S 1600 S90 1600 C 1600 SC (D)(S)1600 C (D)(S) 1600 SC 1600 1600 S 1600 S90 (D)(S):1600 (D)(S): 1600 S (D)(S):	
47	616 01 124 1	gasket		1	1600 /S/S90
47	616 101 391 00	gasket M 601 995 >> M 085 941 >> M 800 150 >> M 713 789 >> M 812 210 >> not for (D)(S) M 732 048 >> M 821 040 >> M 610 755 >> M 700 590 >> M 800 526 >> not for (D)(S) M 611 118 >> M 706 801 >> M 807 187 >> M 610 755 >> M 700 590 >> M 800 526 >> not for (D)(S) M 611 118 >> M 706 801 >> M 807 187 >> M 601 995 >> M 085 941 >> M 800 941 >> M 601 995 >> M 085 941 >> M 800 150 >> M 601 995 >> M 085 941 >> M 800 150 >> M 713 789 >> M 812 210 >> not for (D)(S) M 732 048 >> M 821 040 >> M 610 755 >> M 700 590 >> M 800 526 >> not for (D)(S) M 611 118 >> M 706 801 >> M 807 187 >>		1	1600 S90 1600 1600 S 1600 S90 (D)(S):1600 (D)(S): 1600 S (D)(S): 1600 S90 1600 C/SC 1600 1600 S 1600 S90 (D)(S):1600 (D)(S): 1600 S (D)(S): 1600 S90 1600C/SC 1600 1600 S 1600 S90 1600 1600 S 1600 S90 1600 1600 S 1600 S90 1600 C 1600 SC (D)(S)1600 C (D)(S) 1600 SC 1600 1600 S 1600 S90 (D)(S):1600 (D)(S): 1600 S (D)(S):

Pos	Part Number	Name	Remarks	Qty	Model
					1600 S90
		M 610 755 >>			1600
		M 700 590 >>			1600 S
		M 800 526 >>			1600 S90
		not for			
		(D)(S)			
		M 611 118 >>			(D)(S):1600
		M 706 801 >>			(D)(S):
					1600 S
		M 807 187 >>			(D)(S):
					1600 S90
					1600 C/SC
		M 610 755 >>			1600
		M 700 590 >>			1600 S
		M 800 526 >>			1600 S90
		not for			
		(D)(S)			
		M 611 118 >>			(D)(S):1600
		M 706 801 >>			(D)(S):
					1600 S
		M 807 187 >>			(D)(S):
					1600 S90
					1600C/SC
		M 601 995 >>			1600
		M 085 941 >>			1600 S
		M 800 941 >>			1600 S90
		M 601 995 >>			1600
		M 085 941 >>			1600 S
		M 800 150 >>			1600 S90
48	616 01 114	oil tube		1	
49	616 01 115	plug		2	
50	616 100 136 00	cover		1	
		without			
		bearing			
		4			
		M >> 601 994			1600
		M >> 085 940			1600 S
		M >> 800 149			1600 S90
		M >> 601 994			1600
		M >> 085 940			1600 S
		M >> 800 149			1600 S90

Pos	Part Number	Name	Remarks	Qty	Model
(50)	616 100 136 04	cover		1	
		without			
		bearing			
		4			
		M 601 995 >>			1600
		M 085 941 >>			1600 S
		M 800 150 >>			1600 S90
		M 713 789 >>			1600 C
		M 812 210 >>			1600 SC
		not for			
		(D)(S)			
		M 732 048 >>			(D)(S)1600 C
		M 821 040 >>			(D)(S)
					1600 SC
		M 610 755 >>			1600
		M 700 590 >>			1600 S
		M 800 526 >>			1600 S90
		not for			
		(D)(S)			
		M 611 118 >>			(D)(S):1600
		M 706 801 >>			(D)(S):
					1600 S
		M 807 187 >>			(D)(S):
					1600 S90
		M 610 755 >>			1600
		M 700 590 >>			1600 S
		M 800 526 >>			1600 S90
		not for			
		(D)(S)			
		M 611 118 >>			(D)(S):1600
		M 706 801 >>			(D)(S):
					1600 S
		M 807 187 >>			(D)(S):
					1600 S90
					1600 C/SC
		M 610 755 >>			1600
		M 700 590 >>			1600 S
		M 800 526 >>			1600 S90
		not for			
		(D)(S)			
		M 611 118 >>			(D)(S):1600
		M 706 801 >>			(D)(S):
					1600 S
		M 807 187 >>			(D)(S):
					1600 S90
					1600C/SC
		M 601 995 >>			1600
		M 085 941 >>			1600 S
		M 800 941 >>			1600 S90
		M 601 995 >>			1600
		M 085 941 >>			1600 S
		M 800 150 >>			1600 S90

Pos	Part Number	Name	Remarks	Qty	Model
(50)	616 100 136 05	cover without bearing 4		1	1600C/SC
51	N 012 241 1	spring washer B 8		11	
52	502 08 310	hexagon nut M 8		11	
53	539 01 112	stud		5	
		M 610 755 >>			1600
		M 700 590 >>			1600 S
		M 800 526 >>			1600 S90
		not for (D)(S)			
		M 611 118 >>			(D)(S):1600
		M 706 801 >>			(D)(S): 1600 S
		M 807 187 >>			(D)(S): 1600 S90
		M >> 713 788			1600 C
		M >> 812 209			1600 SC
		not for (D)(S)			
		M >> 732 047			(D)(S): 1600 C
		M >> 821 039			(D)(S): 1600 SC
		M >> 601 994			1600
		M >> 085 940			1600 S
		M >> 800 149			1600 S90
		M 601 995 >>		4	1600
		M 085 941 >>			1600 S
		M 800 150 >>			1600 S90
(53)	N 010 339 3	hexagon-head bolt M 6 X 40		1	
		M 601 995 >>			1600
		M 085 941 >>			1600 S
		M 800 150 >>			1600 S90
		M 713 789 >>			1600 C
		M 812 210 >>			1600 SC
		not for (D)(S)			
		M 732 048 >>			(D)(S)1600 C
		M 821 040 >>			(D)(S) 1600 SC
		M 610 755 >>			1600
		M 700 590 >>			1600 S
		M 800 526 >>			1600 S90
		not for (D)(S)			
		M 611 118 >>			(D)(S):1600
		M 706 801 >>			(D)(S): 1600 S
		M 807 187 >>			(D)(S): 1600 S90
		M 610 755 >>			1600
		M 700 590 >>			1600 S
		M 800 526 >>			1600 S90
		not for (D)(S)			
		M 611 118 >>			(D)(S):1600
		M 706 801 >>			(D)(S): 1600 S
		M 807 187 >>			(D)(S): 1600 S90
		M 807 187 >>			(D)(S): 1600 S90
		M 610 755 >>			1600
		M 700 590 >>			1600 S
		M 800 526 >>			1600 S90
		not for (D)(S)			
		M 611 118 >>			(D)(S):1600
		M 706 801 >>			(D)(S): 1600 S
		M 807 187 >>			(D)(S): 1600 S90
		M 601 995 >>			1600
		M 085 941 >>			1600 S
		M 800 941 >>			1600 S90
		M 601 995 >>			1600
		M 085 941 >>			1600 S
		M 800 150 >>			1600 S90
54	999 113 012 50	shaft seal DG 48 X 65 X10/1		1	
55	539 01 125	gasket		1	
56	N 012 241 1	spring washer B 8		4	
57	N 010 335 5	hexagon-head bolt M 8 X 35		4	
58	539 01 145	bracket		1	1600 /S/S90
58	616 101 216 01	bracket		1	1600 C/SC
59	539 01 115	screw for bearing 4		1	
60	N 012 241 1	spring washer B 8		1	
		- -- E N D -- -			

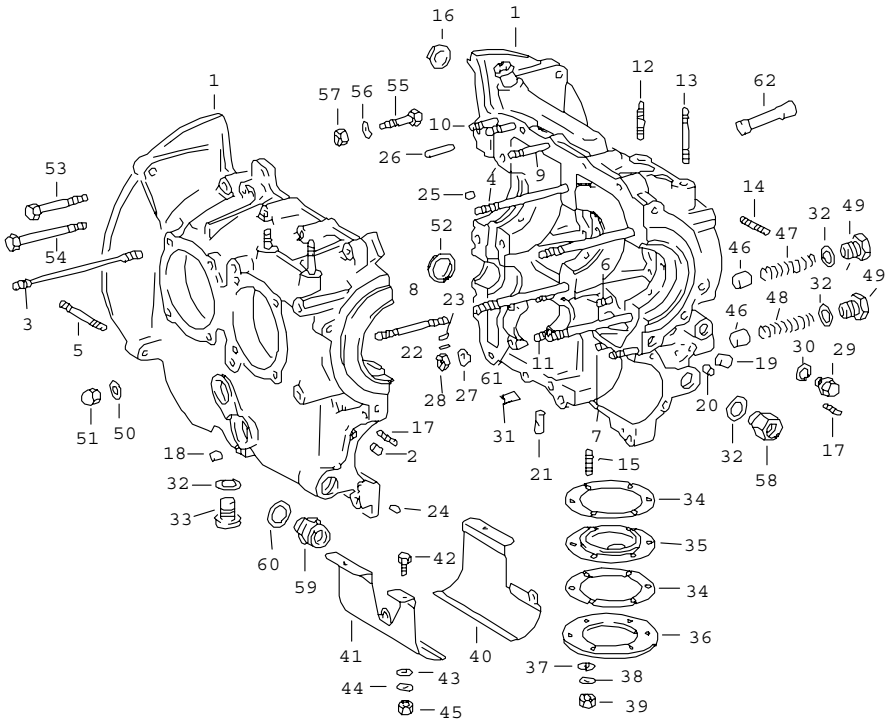

Pos	Part Number	Name	Remarks	Qty	Model
		crankcase			CARRERA
1	E 587 101 999 00	crankcase with studs		1	
2	E 547 01 118	threaded bush		4	
3	999 061 058 00	stud		16	587/1/2
(3)	E 547 01 128	stud		16	692/3/3A
4	539 01 119	stud		4	
-	547 101 162 00	screw for crankcase		2	587/1/2
5	E 999 061 033 01	stud	3A	2	587/1/2 692/
(5)	E 547 01 137	stud		2	692/3
6	E 900 061 023 01	stud M 8 X 15		2	
7	E 900 061 024 00	stud M 8 X 18		2	
8	E 900 061 035 00	stud M 8 X 65		1	
9	E 900 061 041 01	stud M 8 X 50		1	
10	E 900 061 030 01	stud M 8 X 35		3	
11	E 900 061 030 01	stud M 8 X 35		2	587/1/2
(11)	E 900 061 026 01	stud M 8 X 22		2	692/3/3A
12	547 01 133	stud		2	
13	E 900 061 032 01	stud M 8 X 45		2	
14	E 900 061 027 01	stud M 8 X 25		4	
15	E 900 061 016 01	stud M 6 X 12		6	
16	E 900 040 001 02	cover plate 25		1	

Pos	Part Number	Name	Remarks	Qty	Model
17	E 900 081 013 01	stud M 6 X 12 for cover plate		2	587/1/2
(17)	E 900 081 003 00	stud M 6 X 12 for cover plate		2	692/3/3A
18	539 01 111	plug 8 MM		5	
19	E 539 01 107	plug 12 MM		1	
20	E 539 01 108	plug 6 MM		1	
21	E 692 101 405 02	plug oil pan		1	587/1/2
(21)	692 101 405 01	plug oil pan		1	692/3/3A
22	E 900 012 032 00	straight pin 3 H 8 X 8		1	
23	E 900 012 033 00	straight pin 3 H 8 X 10		3	
24	E 900 012 034 00	straight pin 6 H 8 X 10		1	
25	E 547 01 130	straight pin		3	
26	E 547 01 140	straight pin		2	
27	999 039 001 00	tab washer		2	587/1/2
(27)	999 039 001 00	tab washer		2	692/3/3A
28	502 08 310	hexagon nut		2	
29	E 900 065 002 02	screw plug M 14 X 1,5		1	
30	N 013 849 2	sealing ring A 14 X 18		1	
31	E 911 101 123 00	sealing ring oil duct		2	
32	900 123 009 30	sealing ring A 18 X 24		4	
33	E 547 07 112	drain plug		2	
34	539 01 130	gasket		2	
35	E 692 101 180 00	oil strainer complete		1	
36	E 539 01 129	oil drain lid		2	
37	N 011 524 7	washer 6,4		6	
38	900 028 008 01	spring washer B 6		6	
39	900 076 010 02	hexagon nut M 6		6	587/1/2
(39)	900 076 010 02	hexagon nut M 6		6	692/3/3A
40	E 547 07 142	strainer	/R	1	
41	E 547 07 143	strainer	/L	1	
42	N 010 215 13	hexagon-head bolt M 6 X 15		3	
43	N 011 524 7	washer 6,4		3	587/1/2
(43)	999 025 108 02	washer 6,4		3	692/3/3A
44	900 027 014 01	lock ring B 6		3	587/1/2
(44)	900 027 013 01	lock ring B6		3	692/3/3A
45	900 076 010 02	hexagon nut M 6		3	
46	E 547 07 115	piston		2	
47	999 521 017 00	compression spring		1	587/1/2
(47)	E 999 521 012 00	compression spring		1	692/3/3A
48	999 521 018 00	compression spring		1	587/1/2
(48)	999 521 016 00	compression spring		1	692/3/3A
49	E 999 064 009 02	screw plug		2	587/1/2
(49)	E 547 07 114	screw plug		2	692/3/3A
50	616 101 191 00	washer		6	587/1/2
-	999 701 006 40	o-ring		6	

Pos	Part Number	Name	Remarks	Qty	Model
(50)	N 013 808 3	sealing ring		6	692/3/3A
51	E 999 070 004 02	cap nut		6	587/1/2
(51)	369 01 112 1	cap nut		6	692/3/3A
52	E 547 01 107	cap		1	
53	900 074 042 02	hexagon-head bolt M 8 X 60		5	
54	N 010 388 3	hexagon-head bolt M 8 X 90		1	
55	900 074 038 02	hexagon-head bolt M 8 X 40		2	
56	900 028 010 01	spring washer B 8		12	
57	502 08 310	hexagon nut		12	
58	E 692 107 341 00	union		1	
59	900 136 013 02	union A16		1	587/1/2
(59)	E 900 136 003 02	union A16		1	692/3/3A
60	900 123 011 30	sealing ring A 22 X 29		1	
61	E 547 01 104 1	housing		1	587/1/2
-	900 074 291 02	hexagon-head bolt M 10 X 80		1	587/1/2 587/1/2
-	900 074 071 02	hexagon-head bolt M 10 X 115		1	587/1/2 587/1/2
-	N 012 230 1	spring washer B10		1	587/1/2
-	N 011 010 6	hexagon nut M 10		4	587/1/2
-	900 901 010 05	locking wire $ 1,2 MM, 10 M		X	587/1/2
(61)	547 01 104	housing		1	692/2/3A
62	692 101 124 00	bush		1	692/2/3A
		- -- E N D -- -			

Pos	Part Number	Name	Remarks	Qty	Model

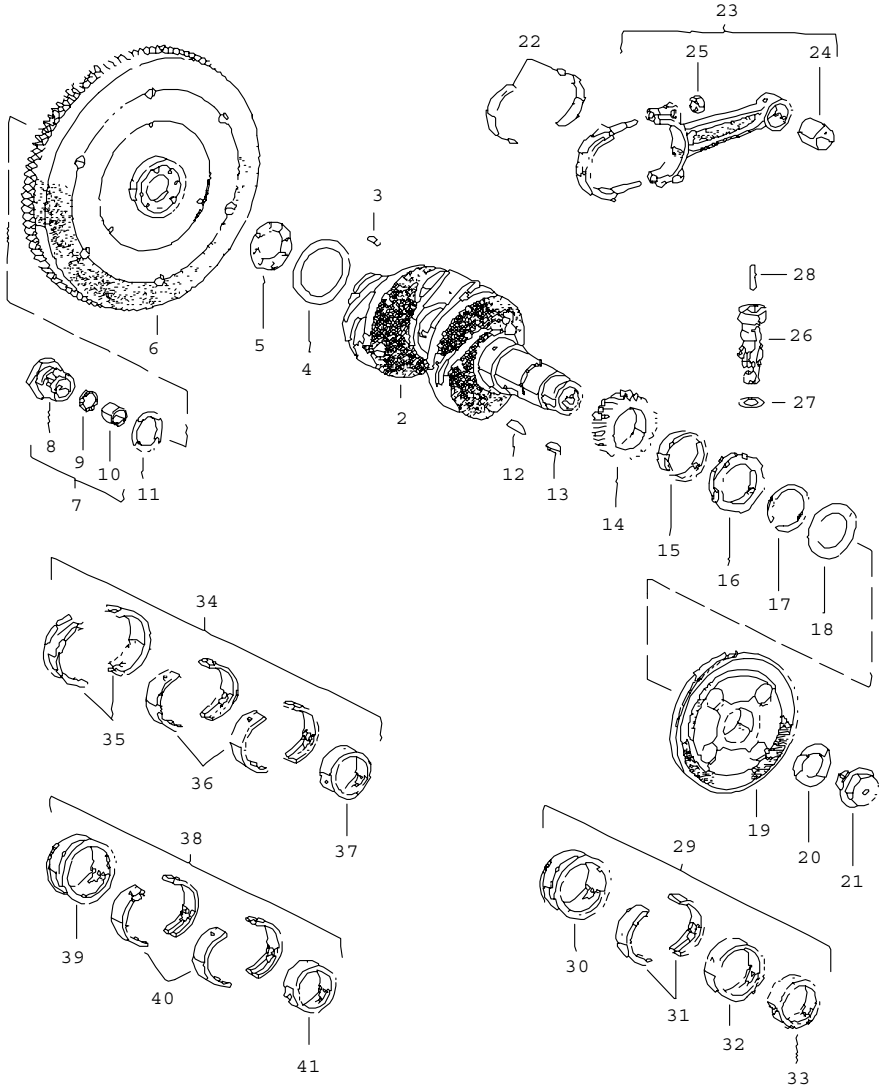

Pos	Part Number	Name	Remarks	Qty	Model
		crankshaft			1600-SC
2	616 102 013 03	crankshaft		1	1600 /S
(2)	616 102 015 01	crankshaft		1	1600 S90
(2)	616 102 013 03	crankshaft		1	1600 C
(2)	616 102 015 01	crankshaft		1	1600 SC
3	900 109 004 00	roller 6 X 12		8	
4	369 02 107 1	thrust washer 0,80 MM		1	1600 /S/C/SC
(4)	369 02 107 2	thrust washer 0,85 MM		1	1600 /S/C/SC
(4)	369 02 107 3	thrust washer 0,90 MM		1	1600 /S/C/SC
(4)	369 02 107 4	thrust washer 0,95 MM		1	1600 /S/C/SC
(4)	369 02 107 5	thrust washer 1,00 MM		1	1600 /S/C/SC
(4)	369 02 107 6	thrust washer 1,05 MM		1	1600 /S/C/SC
(4)	E 616 102 161 00	thrust washer 2,8 MM		1	1600 S90
(4)	616 102 161 01	thrust washer 2,85 MM		1	1600 S90
(4)	616 102 161 02	thrust washer 2,90 MM		1	1600 S90
(4)	616 102 161 03	thrust washer 2,95 MM		1	1600 S90
(4)	E 616 102 161 04	thrust washer 3,00 MM		1	1600 S90
(4)	E 616 102 161 05	thrust washer 3,05 MM		1	1600 S90
(4)	E 616 102 161 06	thrust washer 3,10 MM		1	1600 S90
5	502 02 301	gasket		1	
6	502 102 116 00	flywheel		1	1600 /S
(6)	616 102 201 01	flywheel		1	356 B-T5:

Pos	Part Number	Name	Remarks	Qty	Model
(6)	616 102 201 02	flywheel		1	356 B-T6: 1600 S90
(6)	616 102 201 03	flywheel		1	1600 C/SC
7	616 102 025 01	banjo bolt complete		1	
. 8	-	banjo bolt single parts not available			
9	901 102 191 00	sealing ring		1	
10	E 616 102 241 00	banjo bolt		1	
11	539 02 103	lock washer		1	
12	901 102 147 00	woodruff key for timing gear		1	
13	N 012 709 1	spring for pulley		1	
14	539 02 105	timing gear		1	
15	539 102 106 00	intermediate ring		1	
16	546 102 110 00	drive pinion		1	
17	901 102 148 00	circlip		1	
18	E 616 102 163 01	sealing washer		1	
19	539 02 113	pulley		1	
20	539 02 111	spring washer		1	
21	539 02 112	fastening screw		1	
22	616 103 142 02	bearing shell standard dimension		8	
(22)	616 103 142 52	bearing shell undersize inner 0,25 MM		X	
(22)	616 103 142 62	bearing shell undersize inner 0,50 MM		X	
(22)	616 103 142 72	bearing shell undersize inner 0,75 MM		X	
23	616 103 012 02	connecting rod complete without bearing shell		4	
24	616 103 131 00	connecting rod bush		4	
25	502 03 114	connecting rod nut		8	
26	539 09 101	pinion		1	
27	E 539 09 102	thrust washer		1	
28	539 09 103	spring		1	
29	546 101 901 00	set of crankshaft bearings standard dimension comprising:		1	1600 /S
30	546 101 101 00	bearing sleeve I standard dimension		1	1600 /S
31	539 101 174 00	bearing shell II standard dimension		2	1600 /S
32	546 101 103 00	bearing sleeve III standard dimension		1	1600 /S
33	539 101 146 00	bearing sleeve IV standard dimension		1	1600 /S
(29)	E 546 101 901 50	set of crankshaft bearings undersize inner 0,25 MM comprising:		1	1600 /S
(30)	546 101 101 50	bearing sleeve I undersize 0,25 MM		1	1600 /S
(31)	539 101 174 50	bearing shell II undersize 0,25 MM		2	1600 /S

Pos	Part Number	Name	Remarks	Qty	Model
(32)	E 546 101 103 50	bearing sleeve III undersize 0,25 MM		1	1600 /S
(33)	539 101 146 50	bearing sleeve IV undersize 0,25 MM		1	1600 /S
(29)	546 101 901 55	set of crankshaft bearings undersize inner 0,50 MM comprising:		1	1600 /S
(30)	546 101 101 55	bearing sleeve I undersize 0,50 MM		1	1600 /S
(31)	539 101 174 55	bearing shell II undersize 0,50 MM		2	1600 /S
(32)	546 101 103 55	bearing sleeve III undersize 0,50 MM		1	1600 /S
(33)	539 101 146 55	bearing sleeve IV undersize 0,50 MM		1	1600 /S
(29)	546 101 901 65	set of crankshaft bearings undersize inner 0,75 MM comprising:		1	1600 /S
(30)	546 101 101 65	bearing sleeve I undersize 0,75 MM		1	1600 /S
(31)	539 101 174 65	bearing shell II undersize 0,75 MM		2	1600 /S
(32)	E 546 101 103 65	bearing sleeve III undersize 0,75 MM		1	1600 /S
(33)	539 101 146 65	bearing sleeve IV undersize 0,75 MM		1	1600 /S
(29)	546 101 901 60	set of crankshaft bearings oversize outer 0,25 MM comprising:		1	1600 /S
(30)	546 101 101 60	bearing sleeve I oversize 0,25 MM		1	1600 /S
(31)	539 101 174 60	bearing shell II oversize 0,25 MM		2	1600 /S
(32)	546 101 103 60	bearing sleeve III oversize 0,25 MM		1	1600 /S
(33)	539 101 146 00	bearing sleeve IV standard dimension		1	1600 /S
(29)	E 546 101 901 70	set of crankshaft bearings oversize outer 0,25 MM undersize inner 0,25 MM comprising:		1	1600 /S
(30)	546 101 101 70	bearing sleeve I		1	1600 /S
(31)	539 101 174 70	bearing shell II		2	1600 /S
(32)	546 101 103 70	bearing sleeve III		1	1600 /S
(33)	539 101 146 50	bearing sleeve undersize inner 0,25 MM outer standard dimension		1	1600 /S

Pos	Part Number	Name	Remarks	Qty	Model
(29)	E 546 101 901 75	set of crankshaft bearings oversize outer 0,25 MM undersize inner 0,50 MM comprising:		1	1600 /S
(30)	546 101 101 75	bearing sleeve I		1	1600 /S
(31)	E 539 101 174 75	bearing shell II		2	1600 /S
(32)	546 101 103 75	bearing sleeve III		1	1600 /S
(33)	539 101 146 55	bearing sleeve IV undersize inner 0,50 MM outer standard dimension		1	1600 /S
(29)	546 101 901 85	set of crankshaft bearings oversize outer 0,25 MM undersize inner 0,75 MM		1	1600 /S
(30)	546 101 101 85	bearing sleeve I		1	1600 /S
(31)	539 101 174 85	bearing shell II		2	1600 /S
(32)	546 101 103 85	bearing sleeve III		1	1600 /S
(33)	539 101 146 65	bearing sleeve undersize inner 0,75 MM outer standard dimension		1	1600 /S
34	616 100 130 00	set of crankshaft bearings standard dimension comprising:		1	1600 S90
35	616 101 131 00	main bearing shell I standard dimension		2	1600 S90
36	616 101 132 00	bearing shell II+IV standard dimension		4	1600 S90
37	539 101 146 00	bearing sleeve IV		1	1600 S90
(34)	E 616 100 130 50	set of crankshaft bearings undersize inner 0,25 MM comprising:		1	1600 S90
(35)	616 101 131 50	main bearing shell I undersize 0,25 MM		2	1600 S90
(36)	616 101 132 50	bearing shell II+III undersize 0,25 MM		4	1600 S90
(37)	539 101 146 50	bearing sleeve IV undersize 0,25 MM		1	1600 S90
(34)	616 100 130 55	set of crankshaft bearings undersize inner 0,50 MM comprising:		1	1600 S90
(35)	616 101 131 55	main bearing shell I undersize 0,50 MM		2	1600 S90
(36)	616 101 132 55	bearing shell II+III undersize 0,50 MM		4	1600 S90
(37)	539 101 146 55	bearing sleeve IV undersize 0,50 MM		1	1600 S90
(34)	616 100 130 65	set of crankshaft bearings undersize inner 0,75 MM comprising:		1	1600 S90

Pos	Part Number	Name	Remarks	Qty	Model
(35)	E 616 101 131 65	main bearing shell I undersize 0,75 MM		2	1600 S90
(36)	616 101 132 65	bearing shell II+III undersize 0,75 MM		4	1600 S90
(37)	539 101 146 65	bearing sleeve IV undersize 0,75 MM		1	1600 S90
(34)	616 100 130 60	set of crankshaft bearings oversize outer 0,25 MM		1	1600 S90
(35)	616 101 131 60	main bearing shell I oversize 0,25 MM		2	1600 S90
(36)	616 101 132 60	bearing shell II+III oversize 0,25 MM		4	1600 S90
(37)	539 101 146 00	bearing sleeve IV standard dimension		1	1600 S90
(34)	616 100 130 70	set of crankshaft bearings oversize outer 0,25 MM undersize inner 0,25 MM comprising:		1	1600 S90
(35)	E 616 101 131 70	main bearing shell I		2	1600 S90
(36)	616 101 132 70	bearing shell II+III		4	1600 S90
(37)	539 101 146 50	bearing sleeve undersize inner 0,25 MM outer standard dimension		1	1600 S90
(34)	E 616 100 130 75	set of crankshaft bearings oversize outer 0,25 MM undersize inner 0,50 MM comprising:		1	1600 S90
(35)	E 616 101 131 75	main bearing shell I		2	1600 S90
(36)	616 101 132 75	bearing shell II+III		4	1600 S90
(37)	539 101 146 55	bearing sleeve IV undersize inner 0,50 MM outer standard dimension		1	1600 S90
(34)	616 100 130 85	set of crankshaft bearings oversize outer 0,25 MM undersize inner 0,75 MM comprising:		1	1600 S90
(35)	616 101 131 85	main bearing shell I		2	1600 S90
(36)	E 616 101 132 85	bearing shell II+III		4	1600 S90
(37)	539 101 146 65	bearing sleeve IV undersize inner 0,75 MM outer standard dimension		1	1600 S90
38	616 100 138 00	set of crankshaft bearings standard dimension comprising:		1	1600 C/SC
39	546 101 101 00	bearing sleeve I		1	1600 C/SC
40	616 101 132 00	bearing shell II+III		4	1600 C/SC
41	539 101 146 00	bearing sleeve IV		1	1600 C/SC

Pos	Part Number	Name	Remarks	Qty	Model
(38)	E 616 100 138 50	set of crankshaft bearings undersize inner 0,25 MM comprising:		1	1600 C/SC
(39)	546 101 101 50	bearing sleeve I		1	1600 C/SC
(40)	616 101 132 50	bearing shell II+III		4	1600 C/SC
(41)	539 101 146 50	bearing sleeve IV		1	1600 C/SC
(38)	E 616 100 138 55	set of crankshaft bearings undersize inner 0,50 MM comprising:		1	1600 C/SC
(39)	546 101 101 55	bearing sleeve I		1	1600 C/SC
(40)	616 101 132 55	bearing shell II+III		4	1600 C/SC
(41)	539 101 146 55	bearing sleeve IV		1	1600 C/SC
(38)	E 616 100 138 60	set of crankshaft bearings oversize outer 0,25 MM comprising:		1	1600 C/SC
(39)	546 101 101 60	bearing sleeve I		1	1600 C/SC
(40)	616 101 132 60	bearing shell II+III		4	1600 C/SC
(41)	539 101 146 00	bearing sleeve IV standard dimension		1	1600 C/SC
(38)	616 100 138 65	set of crankshaft bearings undersize inner 0,75 MM comprising:		1	1600 C/SC
(39)	546 101 101 65	bearing sleeve I		1	1600 C/SC
(40)	616 101 132 65	bearing shell II+III		4	1600 C/SC
(41)	539 101 146 65	bearing sleeve IV		1	1600 C/SC
(38)	E 616 100 138 70	set of crankshaft bearings undersize inner 0,25 MM oversize outer 0,25 MM comprising:		1	1600 C/SC
(39)	546 101 101 70	bearing sleeve I		1	1600 C/SC
(40)	616 101 132 70	bearing shell II+III		4	1600 C/SC
(41)	539 101 146 50	bearing sleeve IV outer standard dimension		1	1600 C/SC
(38)	E 616 100 138 75	set of crankshaft bearings undersize inner 0,50 MM oversize outer 0,25 MM comprising:		1	1600 C/SC
(39)	546 101 101 75	bearing sleeve I		1	1600 C/SC
(40)	616 101 132 75	bearing shell II+III		4	1600 C/SC
(41)	539 101 146 55	bearing sleeve IV outer standard dimension		1	1600 C/SC
(38)	616 100 138 85	set of crankshaft bearings undersize inner 0,75 MM oversize outer 0,25 MM comprising:		1	1600 C/SC
(39)	546 101 101 85	bearing sleeve I		1	1600 C/SC
(40)	E 616 101 132 85	bearing shell II+III		4	1600 C/SC

Pos	Part Number	Name	Remarks	Qty	Model	Pos	Part Number	Name	Remarks	Qty	Model
(41)	539 101 146 65	bearing sleeve IV outer standard dimension - -- E N D -- -		1	1600 C/SC						

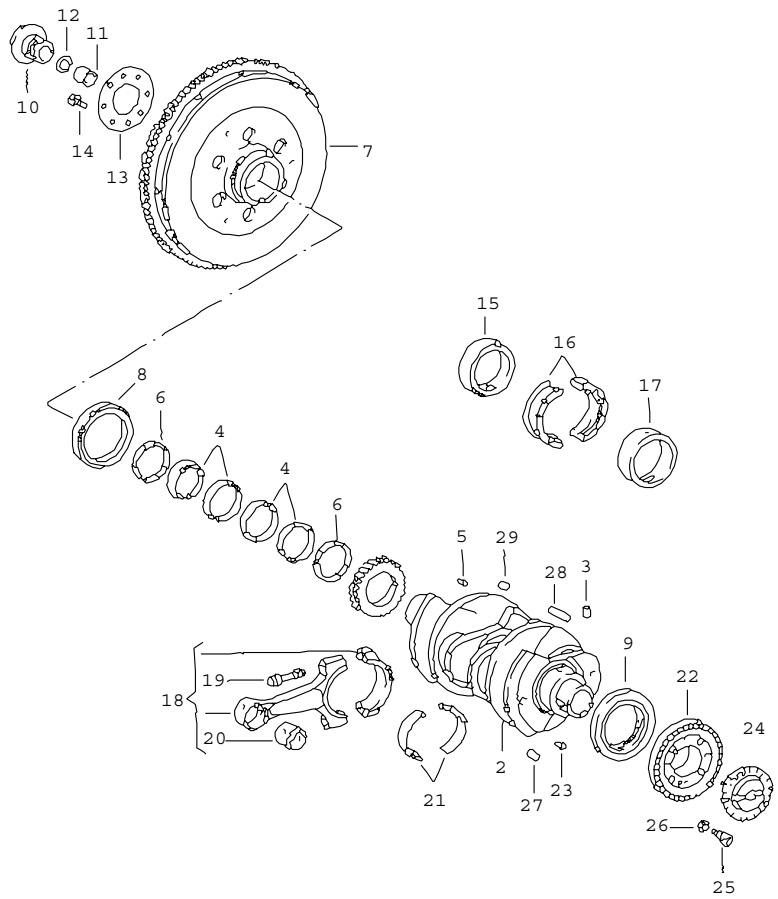

Pos	Part Number	Name	Remarks	Qty	Model
		crankshaft			CARRERA
2	587 102 013 00	crankshaft with picture 27-29		1	587/1/2
(2)	E 692 102 011 00	crankshaft with picture 27		1	692/3
(2)	E 692 102 011 01	crankshaft with picture 27		1	692/3A
(3)	E 539 01 108	plug		4	692/3
(3)	E 692 102 173 00	plug		4	692/3A
4	999 041 403 00	tensioner		2	587/1/2 692/3/3A
(4)	999 041 405 00	tensioner		2	587/2
5	900 118 005 00	woodruff key 4 X 5		1	
6	692 102 215 03	spacer sleeve		2	
7	E 692 102 201 04	flywheel		1	587/1/692/3A
(7)	E 692 102 201 05	flywheel		1	587/2
(7)	692 102 201 01	flywheel		1	
8	999 113 057 52	shaft seal 65 X 85 X 10		1 1	692/3A
-	E 999 113 073 40	bearing		1	692/3/3A
9	PCG 102 123 00	radial sealing ring 55 X 85 X 10		1	
10	692 102 211 04	screw		1	
11	616 102 025 01	banjo bolt		1	587/1/2
(11)	616 102 025 01	banjo bolt		1	692/3/3A
12	901 102 191 00	sealing ring		1	587/1/2
(12)	901 102 191 00	sealing ring		1	692/3/3A
13	692 102 181 01	lock washer		1	587/1/2
(13)	E 692 102 181 00	lock washer		1	692/3/3A

Pos	Part Number	Name	Remarks	Qty	Model
14	E 000 95 124	hexagon-head bolt		2	
15	587 101 131 00	bearing sleeve I		1	587/1/2
(15)	E 587 101 131 50	bearing sleeve I undersize 0,25 mm inner		1	587/1/2
(15)	692 101 136 00	bearing sleeve I		1	692/3
(15)	692 101 137 01	bearing sleeve I		1	692/3A
16	587 101 132 00	bearing shell bearing II		2	587/1/2
(16)	E 587 101 132 50	bearing shell bearing II undersize 0,25 mm inner		2	587/1/2
(16)	E 692 101 135 02	bearing shell bearing II		2	692/3
(16)	692 101 138 00	bearing shell bearing II		2	692/3A
17	587 101 133 00	bearing sleeve III		1 1	587/1/2
(17)	E 587 101 133 50	bearing sleeve III undersize 0,25 mm inner		1	587/1/2
(17)	692 101 133 00	bearing sleeve III		1	692/3
(17)	692 101 139 01	bearing sleeve III		1	692/3A
18	E 587 103 011 01	connecting rod complete connecting rods weight without bearing shell indicate		4	587/1/2
(18)	E 692 103 011 04	connecting rod complete connecting rods weight without bearing shell indicate		4	692/3/3A
19	587 103 105 00	connecting rod bolt		8	587/1/2
(19)	587 103 105 00	connecting rod bolt		8	692/3/3A
20	587 103 103 00	connecting rod bush		4	587/1/2
(20)	E 692 103 104 00	connecting rod bush		4	692/3/3A
21	587 103 104 01	bearing shell		8	587/1/2
(21)	E 587 103 104 51	bearing shell undersize 0,25 mm inner		8	587/1/2
(21)	692 103 105 00	bearing shell		8	692/3/3A
22	E 547 02 105	v-belt pulley	3A	1	587/1/692/3/
(22)	E 587 102 121 00	v-belt pulley		1	587/2
23	E 900 117 017 00	key A 8 X 5 X 18		1	
24	E 692 102 171 00	screw		1	
25	N 014 750 3	pan-head screw M 6 X 10		2	587/1/2
(25)	E 900 067 006 00	pan-head screw M 6 X 10		2	692/3/3A
26	900 027 013 01	lock ring B 6		2	
27	-	not available			
28	-	not available			
29	-	not available			

- -- E N D -- -

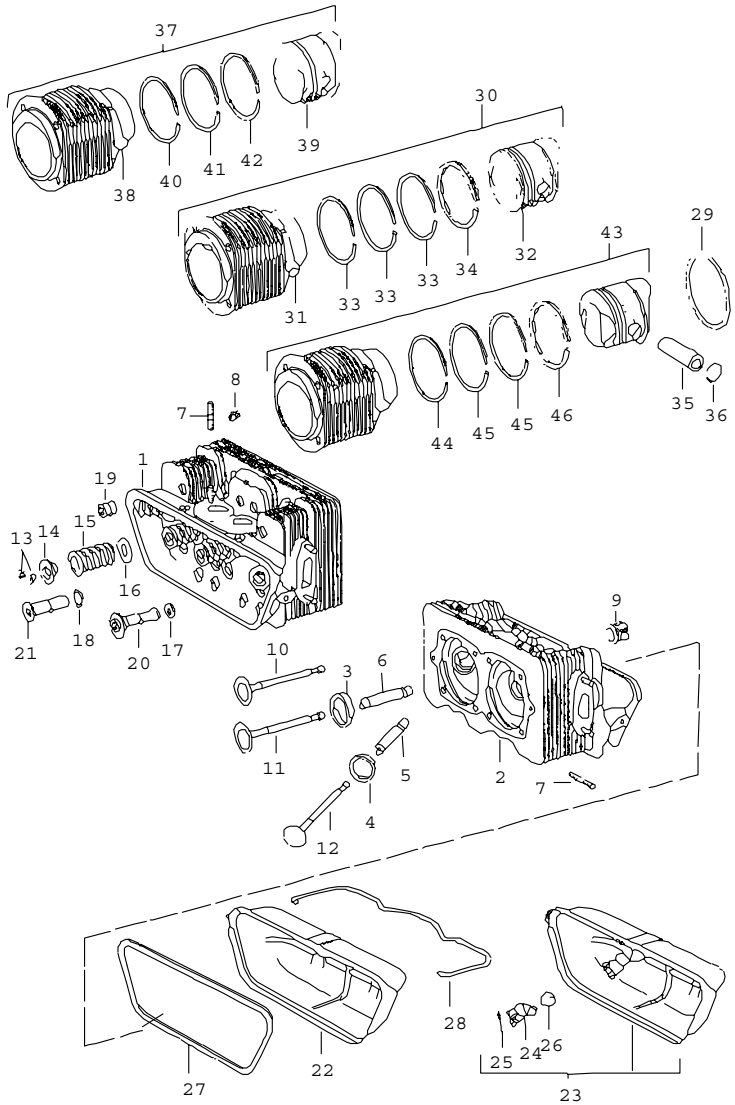

Pos	Part Number	Name	Remarks	Qty	Model
		cylinder head cylinder with pistons			
1	E 616 104 002 X	cylinder head exchange with valves ready for installation		2	1600 /S
(1)	E 616 104 001 00	cylinder head with valves ready for installation		2	1600 S90
1	616 104 006 00	cylinder head with valves ready for installation		2	1600 C
(1)	E 616 104 006 01	cylinder head		2	1600 SC
(1)	616 104 006 AX	cylinder head with valves ready for installation		2	1600 SC
2	E 616 104 032 00	cylinder head without valves		2	1600 /S
(2)	E 616 104 031 00	cylinder head without valves		2	1600 S90
2	616 104 036 01	cylinder head without valves		2	1600 C/SC
3	369 104 206 52	valve seat ring intake oversize		X	1600 /S 1600 C/SC
3	E 616 104 311 50	valve seat ring intake oversize		X	1600 S90
4	616 104 315 52	valve seat ring exhaust 2nd oversize unleaded oversize		X	
4	616 104 316 52	valve seat ring exhaust oversize		X	1600 C/SC
5+6	616 104 322 60	valve guide 1st oversize intake and exhaust for - 1600 / S90- only exhaust		X	

Pos	Part Number	Name	Remarks	Qty	Model
5	616 104 321 50	valve guide 1st oversize intake		X	1600 S90
(5+6)	616 104 322 60	valve guide 2nd oversize intake and exhaust for - 1600 / S90- only exhaust		X	
(5)	616 104 321 60	valve guide 2nd oversize intake		X	1600 S90
6	616 104 321 51	valve guide intake and exhaust 1st oversize		X	1600 C/SC
(6)	616 104 321 62	valve guide intake and exhaust 2nd oversize		X	1600 C/SC
7	E 999 062 005 02	stud BM 8 X 18 for exhaust manifold		8	
(7)	000 95 129	stud for intake manifold		4	
8	616 04 209	threaded insert M 14 X 1,25 X 8,75 for spark plug		4	
9	616 105 491 02	gasket		4	1600 C/SC
10	546 05 203	intake valve		4	1600 /S
11	616 105 401 00	intake valve		4	1600 S90
11	616 105 402 00	intake valve		4	1600 C/SC
12	616 105 405 50	exhaust valve unleaded		4	1600 /S/S90
(12)	616 105 406 50	exhaust valve unleaded		4	1600 C/SC
13	369 05 204 1	collet divided		16	
13	901 105 417 00	collet divided		16	1600 C/SC
14	616 105 421 01	concave washer		8	
14	616 105 422 00	concave washer		8	1600 C/SC
15	616 105 432 03	valve spring		8	
16	369 04 218	washer		8	1600 S90
(16)	369 04 218	shim		24	
17	999 031 062 02	washer		16	
18	539 04 203	gasket		8	
19	616 104 382 00	cylinder head nut		8	
20	616 104 381 01	cylinder head nut		4	1600
20	616 104 381 01	cylinder head nut		6	1600 S/S90
21	616 104 383 00	cylinder head nut		4	1600
21	616 104 383 00	cylinder head nut		2	1600 S/S90
22	597 104 305 00	cover		2	1600
22	597 104 305 00	cylinder head cover		2	1600 C/SC
(22)	E 616 104 043 01	cylinder head cover		2	1600 C/SC
23	E 616 104 043 01	cylinder head cover		2	1600 S/S90
24	E 616 104 454 01	strainer		2	1600 S/S90
25	E 900 021 005 00	cotter pin		2	1600 S/S90
26	E 900 108 002 00	ball		2	1600 S/S90
27	616 104 951 00	gasket cork		2	
28	E 369 04 240	clamp		2	
29	539 04 209	cylinder base gasket copper		4	
30	616 103 903 00	cylinder with pistons complete		4	1600
31	E 616 04 102 1	cylinder		4	

Pos	Part Number	Name	Remarks	Qty	Model
31	E 616 104 104 00	cylinder grey cast iron $ 82,5 MM		4	1600
32	E 616 103 032 00	piston complete $ 82,5 MM		4	1600
(32)	E 616 103 032 50	piston $ 83,0 MM		4	1600
33	616 103 311 01	piston ring for piston $ 82,5 MM		12	1600
34	E 616 103 314 00	oil scraper ring for piston $ 82,5 MM		4	1600
(33)	E 616 103 311 51	piston ring for piston $ 83,0 MM		12	1600
(34)	616 103 314 50	oil scraper ring for piston $ 83,0 MM		4	1600
(32)	E 616 103 032 60	piston complete $ 83,5 MM		4	1600
(33)	E 616 103 311 61	piston ring $ 83,5 MM		12	1600
(34)	E 616 103 314 60	oil scraper ring $ 83,5 MM		4	1600
30	616 103 906 01	cylinder with pistons complete $ 82,5 MM		4	1600 C
31	E 616 104 104 00	cylinder $ 82,5 MM grey cast iron		4	1600 C
32	616 103 906 01	cylinder with pistons complete $ 82,5 MM		4	1600 C
33	616 103 311 01	piston ring groove 1 groove 2 groove 3		12	1600 C
34	E 616 103 314 00	oil scraper ring groove 4		4	1600 C
32	E 616 103 035 51	piston complete $ 83,0 MM		4	1600 C
33	E 616 103 311 51	piston ring NUTE 1-3		12	1600 C
34	616 103 314 50	oil scraper ring NUTE 4		4	1600 C
(30)	616 103 904 01	cylinder with pistons complete $ 82,5 MM - FERRAL - M >> 811 361 not for (D)(S)		4	1600 SC
-	616 103 312 02	piston ring NUTE 1 for piston 616.103.031.01 M >> 811 361 not for (D)(S)		4	1600 SC
-	616 103 311 00	piston ring NUTE 2+3 for piston 616.103.031.01 M >> 811 361 not for (D)(S)		8	1600 SC
-	616 103 315 00	piston ring NUTE 4 M >> 811 361 not for (D)(S)		4	1600 SC
-	616 105 432 03	valve spring M 811 362 >> not for (D)(S)		8	1600 SC
(30)	616 103 904 04	cylinder with pistons		4	
(30)	616 103 904 04	cylinder with pistons $ 82,5 MM - BIRAL - M 811 362 >> not for (D)(S)		4	1600 SC

Pos	Part Number	Name	Remarks	Qty	Model
-	616 103 907 00	set of piston rings M 811 362 >> not for (D)(S)		4	1600 SC
-	616 103 331 00	piston rings NUTE 1 M 811 362 >> not for (D)(S)		4	1600 SC
-	616 103 331 01	piston rings NUTE 2 M 811 362 >> not for (D)(S)		4	1600 SC
-	616 103 334 00	piston rings NUTE 3 M 811 362 >> not for (D)(S)		4	1600 SC
(32)	E 616 103 036 52	piston $ 83,0 MM - BIRAL - oversize M 811 362 >> not for (D)(S)		4	1600 SC
-	616 103 907 01	set of piston rings $ 83,0 MM oversize M 811 362 >> not for (D)(S)		4	1600 SC
-	616 103 331 50	piston rings NUTE 1 $ 83,0 MM oversize M 811 362 >> not for (D)(S)		4	1600 SC
-	616 103 331 51	piston rings NUTE 2 $ 83,0 MM M 811 362 >> not for (D)(S)		4	1600 SC
-	616 103 334 50	piston rings NUTE 3 $ 83,0 MM oversize M 811 362 >> not for (D)(S)		4	1600 SC
35	E 616 103 321 00	piston pin marked black		X	
(35)	616 103 321 01	piston pin marked white		X	
(35)	E 616 103 321 50	piston pin oversize marked blue		X	
36	E 900 178 001 00	snap ring C 22		8	
37	616 103 906 01	cylinder with pistons complete		4	356 B-T5: 1600 S
37	616 103 906 01	cylinder with pistons complete $ 82,5 MM		4	356 B-T6: 1600 S
38	E 616 104 104 00	cylinder grey cast iron $ 82,5 MM		4	1600 S
39	616 103 906 01	cylinder with pistons $ 82,5 MM		4	356 B-T6: 1600 S
(39)	E 616 103 035 51	piston $ 83,0 MM		4	356 B-T6: 1600 S
(32)	E 616 103 035 00	piston complete		4	1600 S
0+41	616 103 311 01	piston ring NUTE 1-3		12	1600 S
40	616 103 311 01	piston ring NUTE 1-3 for piston $ 82,5 MM		12	356 B-T6: 1600 S
(40)	E 616 103 311 51	piston ring NUTE 1-3 for piston $ 83,0MM		12	356 B-T6: 1600 S

Pos	Part Number	Name	Remarks	Qty	Model
42	E 616 103 314 00	oil scraper ring for piston $ 82,5 MM		4	1600 S
(42)	616 103 314 50	oil scraper ring for piston $ 83,0 MM		4	356 B-T6: 1600 S
(39)	E 616 103 035 61	piston $ 83,5 MM		4	356 B-T6: 1600 S
(40)	E 616 103 311 61	piston ring NUTE 1-3 for piston $ 83,5 MM		12	356 B-T6: 1600 S
(42)	E 616 103 314 60	oil scraper ring for piston $ 83,5 MM		4	356 B-T6: 1600 S
43	616 103 904 04	cylinder with pistons complete		4	1600 S90
44	616 103 312 02	piston ring NUTE 1		4	1600 S90
44	616 103 311 00	piston ring NUTE 2+3		8	1600 S90
46	616 103 315 00	piston ring		4	1600 S90
		- -- E N D -- -			

Pos	Part Number	Name	Remarks	Qty	Model

Model	Year	MG	SG	Illustration	Restrictions	Update	12:54	27.10.2005	PORSCHE	PET	PORSCHE
356	65	1	03	103-03		194					

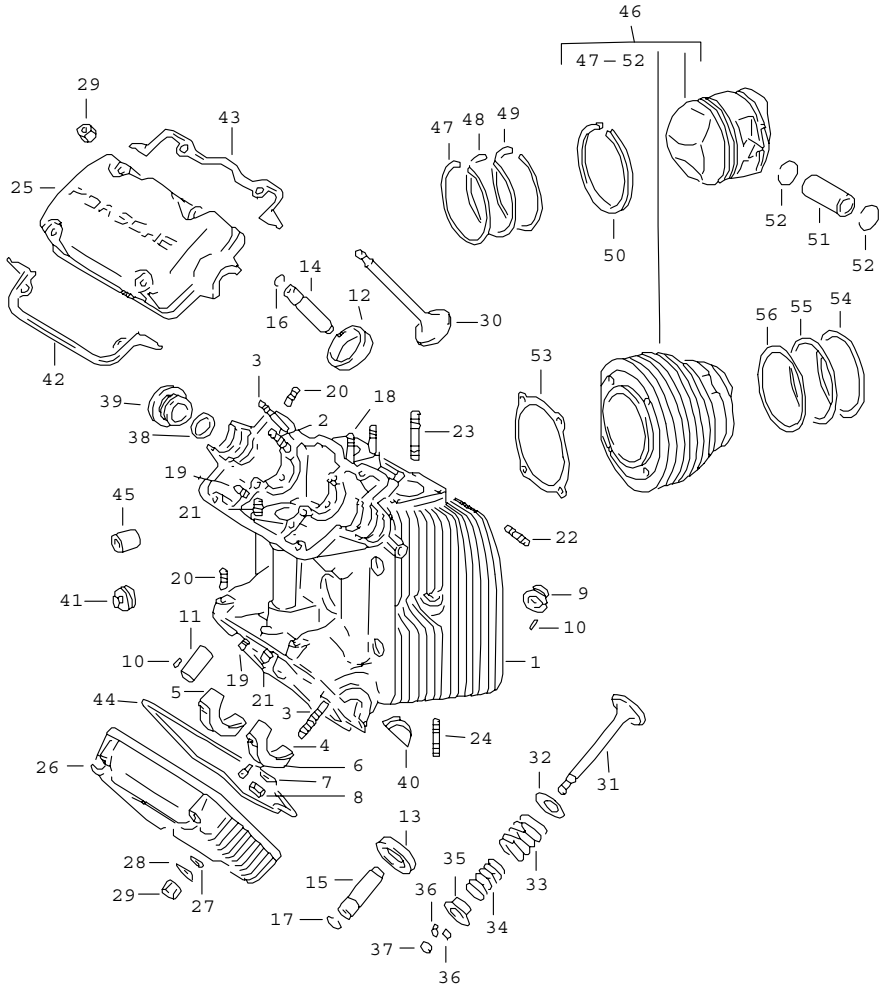

Pos	Part Number	Name	Remarks	Qty	Model
		cylinder head cylinder with pistons			CARRERA 587/1/2
1	E 587 104 902 00	cylinder head with valves housing and stud comprising: picture NR.1 - 36		2	587/1
(1)	E 587 104 902 01	cylinder head with valves housing and stud comprising: picture NR.1 - 36		2	587/2
(1)	E 587 104 031 00	cylinder head without valves with housing and stud comprising: picture NR.1 - 29		2	587/1
(1)	E 587 104 032 00	cylinder head without valves with housing and stud comprising: picture NR.1 - 29		2	587/2
2	E 900 061 029 02	stud housing M 8 X 30		16	
3	E 900 061 032 01	stud valve cover M 8 X 45		16	587/1
(3)	E 900 061 029 02	stud valve cover M 8 X 30		8	587/2
4	E 547 04 204 1	housing camshaft		4	

Pos	Part Number	Name	Remarks	Qty	Model
5	E 547 04 205 1	housing camshaft		4	
6	E 547 04 236	lock housing		8	
7	999 039 001 00	tab washer housing		16	
8	502 08 310	hexagon nut		16	
9	E 547 04 231	threaded bush spark plug		8	
10	E 900 012 032 00	straight pin 3H 8 X 8		16	
11	E 547 05 320	threaded bush		8	
12	E 547 05 206 10	valve seat ring intake oversize		4	
13	587 104 315 52	valve seat ring exhaust oversize		4	
14	E 587 104 321 50	valve guide intake oversize		4	
-	587 104 391 00	seal intake valve		4	
15	E 547 104 326 50	valve guide exhaust oversize		4	
-	587 104 392 00	seal intake valve		4	
16	E 900 152 003 00	snap ring 12 valve guide intake		4	
17	E 900 152 005 00	snap ring 16 valve guide exhaust		4	
18	E 900 061 052 01	stud M 8 X 42		2	
19	E 900 061 016 01	stud M 6 X 12		8	
20	E 900 061 016 01	stud M 6 X 12		8	
21	E 900 061 023 01	stud M 8 X 15		12	
22	E 900 061 022 01	stud M 8 X 12		1	
23	E 900 061 029 02	stud M 8 X 30		12	
24	900 081 004 02	stud M 8 X 20		8	
25	E 692 104 401 00	valve cover intake		2	
26	547 104 405 00	valve cover exhaust		2	587/1
-	E 900 061 032 01	stud M 8 X 45 valve cover intake		8	
-	E 900 061 029 02	stud M 8 X 30 valve cover exhaust		8	
(26)	547 104 405 00	valve cover exhaust		2	587/2
27	900 123 002 20	sealing ring A 8 X 14 copper		8	
28	E 547 04 235	tab washer		8	
29	E 900 070 003 02	cap nut M 8		16	
30	719 105 401 00	intake valve		4	587/1
(30)	719 105 401 04	intake valve		4	587/2
31	719 105 405 50	exhaust valve		4	587/1
(31)	719 105 405 04	exhaust valve		4	587/2
32	E 547 05 217	washer		16	
(32)	E 547 105 428 00	washer		4	
(32)	E 547 105 427 00	washer		4	587/2

Pos	Part Number	Name	Remarks	Qty	Model
33	901 105 437 03	valve spring outer		8	587/1
(33)	E 547 05 216	valve spring outer		4	587/2
(33)	547 105 431 01	valve spring outer		4	587/2
34	901 105 439 03	valve spring inner		8	587/1
(34)	E 547 05 215	valve spring inner		4	587/2
(34)	547 105 435 01	valve spring inner		4	587/2
35	547 05 214	concave washer		8	
(35)	719 105 422 00	concave washer		4	587/2
-	547 105 425 00	shim		8	587/2
36	547 05 213	valve collet		16	
37	E 587 105 441 00	cap 1,5 MM		X	
(37)	E 587 105 441 01	cap 1,75 MM		X	
(37)	E 587 105 441 02	cap 2,0 MM		X	
(37)	E 587 105 441 03	cap 2,25 MM		X	
(37)	E 587 105 441 04	cap 2,5 MM		X	
(37)	E 587 105 441 05	cap 2,75 MM		X	
(37)	E 587 105 441 06	cap 3,0 MM		X	
(37)	E 587 105 441 07	cap 3,25 MM		X	
(37)	E 587 105 441 08	cap 3,5 MM		X	
38	E 547 09 205	o-ring		5	
39	E 547 05 302	screw plug		3	
40	547 04 228	sealing rubber		4	
41	547 04 223	plug rubber		16	
42	692 104 911 00	gasket I		2	
43	692 104 912 00	gasket II		2	
44	692 104 913 00	sealing cord		2	
45	E 539 04 202	cylinder head nut		16	
-	E 999 031 044 02	washer		16	
46	E 587 103 905 00	cylinder with pistons complete		4	
47	E 587 103 312 01	piston ring groove 2 old version and new design		4	
48	E 587 103 312 00	piston ring groove 2 old version		4	
(48)	E 587 103 311 00	piston ring groove 2 new design		4	
-	587 103 907 00	set of piston rings old version		1	
-	E 587 103 312 01	piston ring groove 1		1	
-	E 587 103 312 00	piston ring groove 2		1	
-	E 587 103 313 00	oil scraper ring groove 3		1	
-	E 587 103 314 01	tubular spring ring groove 4		1	
-	587 103 906 00	set of piston rings new design		1	
-	E 587 103 312 01	piston ring groove 1		1	
-	E 587 103 311 00	piston ring groove 2		1	
-	E 587 103 313 00	oil scraper ring groove 3		1	

Pos	Part Number	Name	Remarks	Qty	Model
-	E 587 103 314 01	tubular spring ring groove 4		1	
49	E 587 103 313 00	oil scraper ring groove 3 old version and new design		4	
50	E 587 103 314 01	tubular spring ring		4	
51	E 587 103 321 00	piston pin		4	
52	900 178 003 00	lock C 25		8	
53	PCG 104 191 50	cylinder head gasket		4	
54	E 692 104 192 00	cylinder base gasket 0,2 MM		X	
55	E 692 104 192 01	cylinder base gasket 0,5 MM		X	
56	E 692 104 192 02	cylinder base gasket 1,0 MM		X	
-	E 692 104 192 03	cylinder base gasket 0,4 MM		X	
-	E 692 104 192 04	cylinder base gasket 0,6 MM		X	
		- -- E N D -- -			

Pos	Part Number	Name	Remarks	Qty	Model

Model	Year	MG	SG	Illustration	Restrictions	Update	12:54	27.10.2005	PORSCHE	PET	PORSCHE
356	65	1	03	103-04		194					

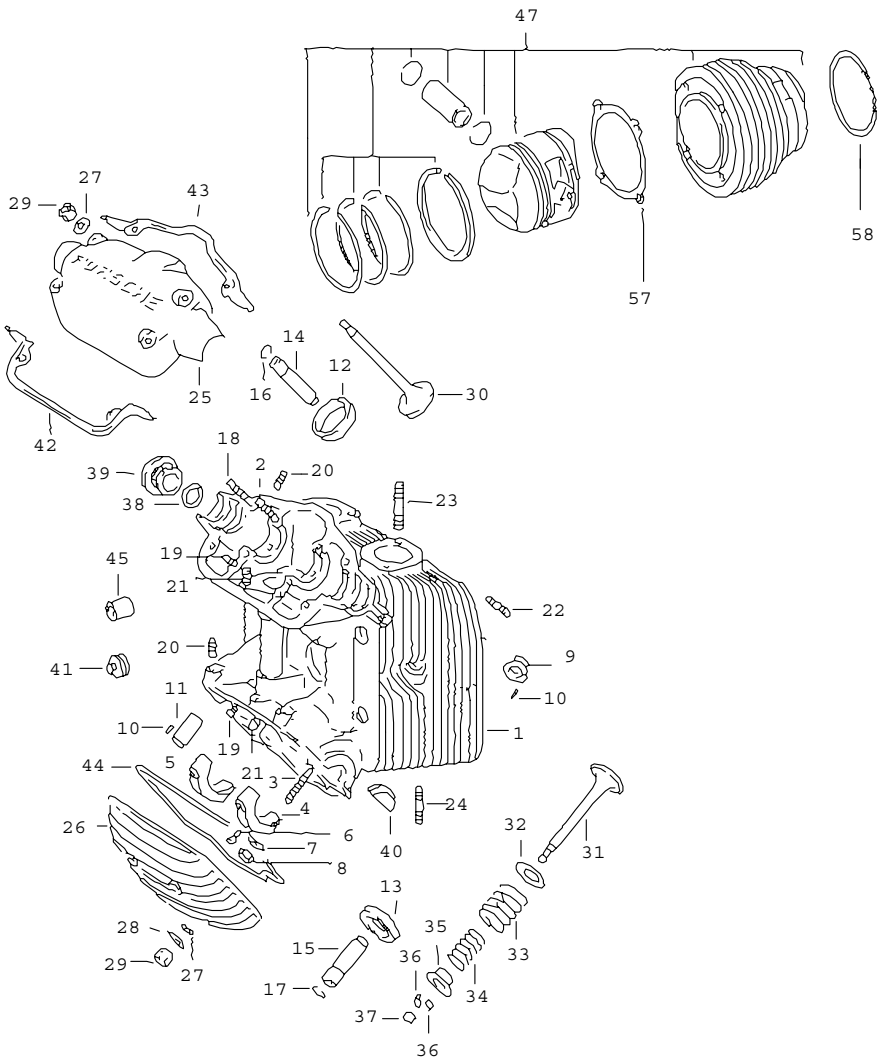

Pos	Part Number	Name	Remarks	Qty	Model
		cylinder head cylinder with pistons			CARRERA 692/3/3A
1	E 692 104 008 00	cylinder head with valves housing and stud comprising: picture NR.1 - 36		2	692/3
(1)	E 692 104 008 01	cylinder head with valves housing and stud comprising: picture NR.1 - 36		2	692/3A
(1)	E 692 104 006 00	cylinder head without valves with housing and stud comprising: picture NR.1 - 29		2	692/3
(1)	E 692 104 006 01	cylinder head without valves with housing and stud comprising: picture NR.1 - 29		2	692/3A
2	E 900 061 029 02	stud housing M 8 X 30		8	
3	547 04 211	stud housing and valve cover		8	
4	E 547 04 204 1	housing camshaft		4	
5	E 547 04 205 1	housing camshaft		4	

Pos	Part Number	Name	Remarks	Qty	Model
6	E 547 04 236	lock housing		8	
7	999 039 001 00	tab washer housing		16	
8	502 08 310	hexagon nut		16	
9	E 547 04 231	threaded bush spark plug		8	
10	E 900 012 032 00	straight pin 3H 8 X 8		16	
11	E 547 05 320	threaded bush		8	
12	E 547 05 206 10	valve seat ring intake oversize		4	
13	587 104 315 52	valve seat ring exhaust oversize		4	
14	930 104 321 50	valve guide intake oversize		4	
15	E 587 104 326 50	valve guide exhaust oversize		4	
16	E 900 152 003 00	snap ring 12 valve guide intake		4	
-	E 547 104 361 00	guide ring $ 35,70 MM intake		4	692/3A
-	E 547 104 361 01	guide ring $ 35,75 MM intake		4	692/3A
-	E 547 104 361 02	guide ring $ 35,80 MM intake		4	692/3A
-	E 547 104 361 03	guide ring $ 35,85 MM intake		4	692/3A
-	E 547 104 361 04	guide ring $ 35,90 MM intake		4	692/3A
17	E 900 152 005 00	snap ring 16 valve guide exhaust		4	
18	E 900 061 030 01	stud M 8 X 35		8	
19	E 900 061 016 01	stud M 6 X 12		8	
20	E 900 081 003 00	stud M 6 X 12		8	
21	E 900 061 023 01	stud M 8 X 15		12	
22	E 900 061 022 01	stud M 8 X 12		1	
23	E 900 061 029 02	stud M 8 X 30 S new design		8	
24	900 081 004 02	stud M 8 X 20		8	
25	E 547 04 225 1	valve cover intake		2	
26	547 04 226	valve cover exhaust		2	
27	900 123 002 20	sealing ring A 8 X 14 copper		16	
28	E 547 04 235	tab washer		8	
29	E 900 070 003 02	cap nut M 8		16	
30	719 105 401 00	intake valve		4	
31	719 105 405 50	exhaust valve		4	
32	E 547 05 217	washer		X	
(32)	E 547 105 427 00	shim		4	692/3A
(32)	547 105 425 00	shim		8	692/3A
33	E 547 05 216	valve spring intake exhaust outer		8	692/3

Pos	Part Number	Name	Remarks	Qty	Model
33	E 547 05 216	valve spring exhaust outer		4	692/3A
(33)	901 105 437 03	valve spring intake outer		4	692/3A
34	E 547 05 215	valve spring intake exhaust inner		8	692/3
34	E 547 05 215	valve spring exhaust inner		4	692/3A
(34)	901 105 439 03	valve spring intake inner		4	692/3A
35	547 05 214	concave washer intake exhaust		8	692/3
35	547 05 214	concave washer exhaust		4	692/3A
(35)	719 105 422 00	concave washer intake		4	692/3A
36	547 05 213	valve collet		16	
37	E 547 05 313 1	cap 2,0 MM		X	
(37)	E 547 05 314 1	cap 2,5 MM		X	
(37)	E 547 05 315 1	cap 3,0 MM		X	
(37)	E 547 05 316 1	cap 3,5 MM		X	
(37)	E 547 05 317 1	cap 1,5 MM		X	
(37)	E 547 05 313 1	cap 2,0 MM		X	
(37)	E 547 05 314 1	cap 2,5 MM		X	
(37)	E 547 05 315 1	cap 3,0 MM		X	
(37)	E 547 05 316 1	cap 3,5 MM		X	
(37)	E 547 05 317 1	cap 1,5 MM		X	
38	E 547 09 205	o-ring		2	
39	E 547 05 302	catch		1	
40	547 04 228	sealing rubber		4	
41	547 04 223	plug rubber		16	
42	547 04 233	gasket I		2	
43	547 04 234	gasket II		2	
44	692 104 913 00	sealing cord		2	
45	E 539 04 202	cylinder head nut		16	
-	E 547 01 141	washer		16	
47	547 103 903 02	cylinder with pistons complete		4	
57	PCG 104 191 00	cylinder head gasket		4	
58	E 692 104 192 00	cylinder base gasket 0,2 MM		X	
58	E 692 104 192 01	cylinder base gasket 0,5 MM		X	
58	E 692 104 192 02	cylinder base gasket 1,0 MM		X	

- -- E N D -- -

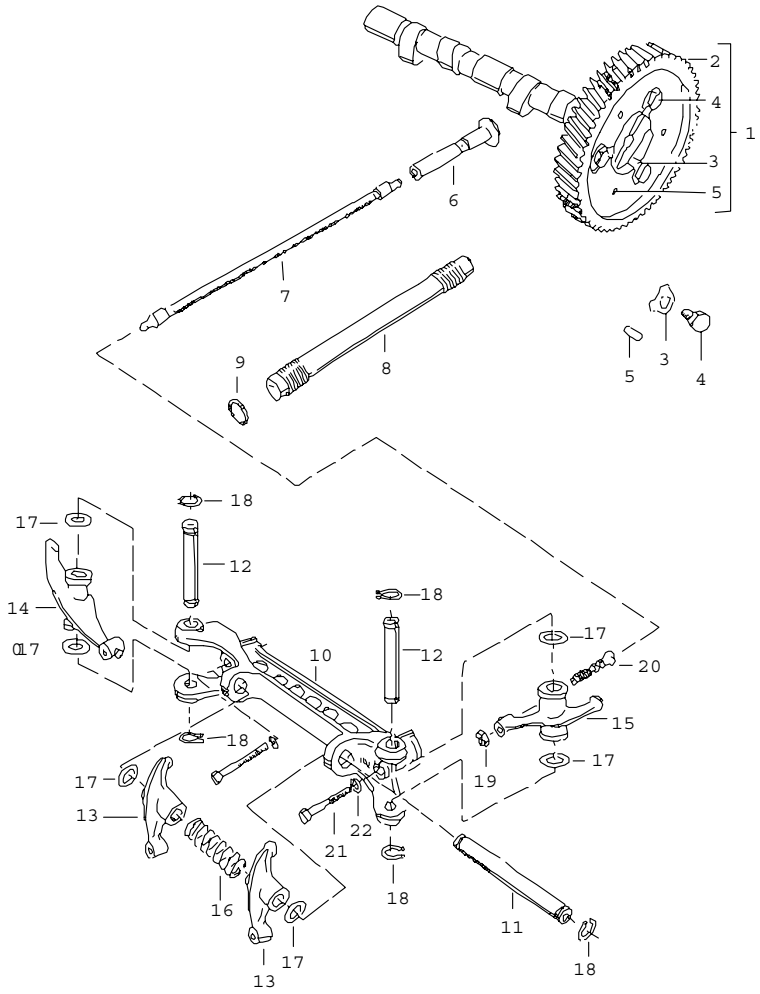

Pos	Part Number	Name	Remarks	Qty	Model
		camshaft			1600
1	-	camshaft alternative parts:		X	
-	616 105 011 00	camshaft complete with gear wheel size 0		1	
-	616 105 011 10	camshaft complete with gear wheel -1		1	
-	616 105 011 20	camshaft complete with gear wheel -2		1	
-	616 105 011 30	camshaft complete with gear wheel +1		1	
-	616 105 011 40	camshaft complete with gear wheel +2		1	
2	-	gear wheel alternative parts:		X	
-	616 105 103 01	gear wheel size 0 aluminium		1	
-	616 105 103 11	gear wheel -1 aluminium		1	
-	616 105 103 21	gear wheel -2 aluminium		1	
-	616 105 103 31	gear wheel +1 aluminium		1	
-	616 105 103 41	gear wheel +2 aluminium		1	

Pos	Part Number	Name	Remarks	Qty	Model
3	999 039 001 00	tab washer		3	
4	900 075 024 00	hexagon-head bolt M 8 X 13		3	
4	E 900 075 453 00	hexagon-head bolt M 8 X 16		3	
5	N 013 199 1	straight pin 6 X 12		3	
6	539 05 210	cam follower (RCC)		8	
7	616 105 028 02	valve pushrod 65 GR complete steel		8	
8	PCG 105 231 00	protective tube		8	
9	539 05 207	gasket		8	
10	539 05 223	rocker arm bridge		2	
11	539 05 225	rocker shaft long		2	
12	E 539 05 226	rocker shaft short		4	
13	E 369 05 271	rocker arm		4	
14	E 539 05 218	rocker arm long		2	
15	E 539 05 219	rocker arm short		2	
16	539 05 205	spring		2	
17	539 05 235	thrust washer 0,50 MM		X	
(17)	E 539 05 236	thrust washer 0,40 MM		X	
(17)	539 05 237	thrust washer 0,60 MM		X	
18	N 012 416 1	circlip 16 X 1		12	
19	900 078 011 00	nut M 8 X 1		8	
20	E 369 05 243	adjusting screw		8	
22	900 028 005 01	spring washer		4	
		- -- E N D -- -			

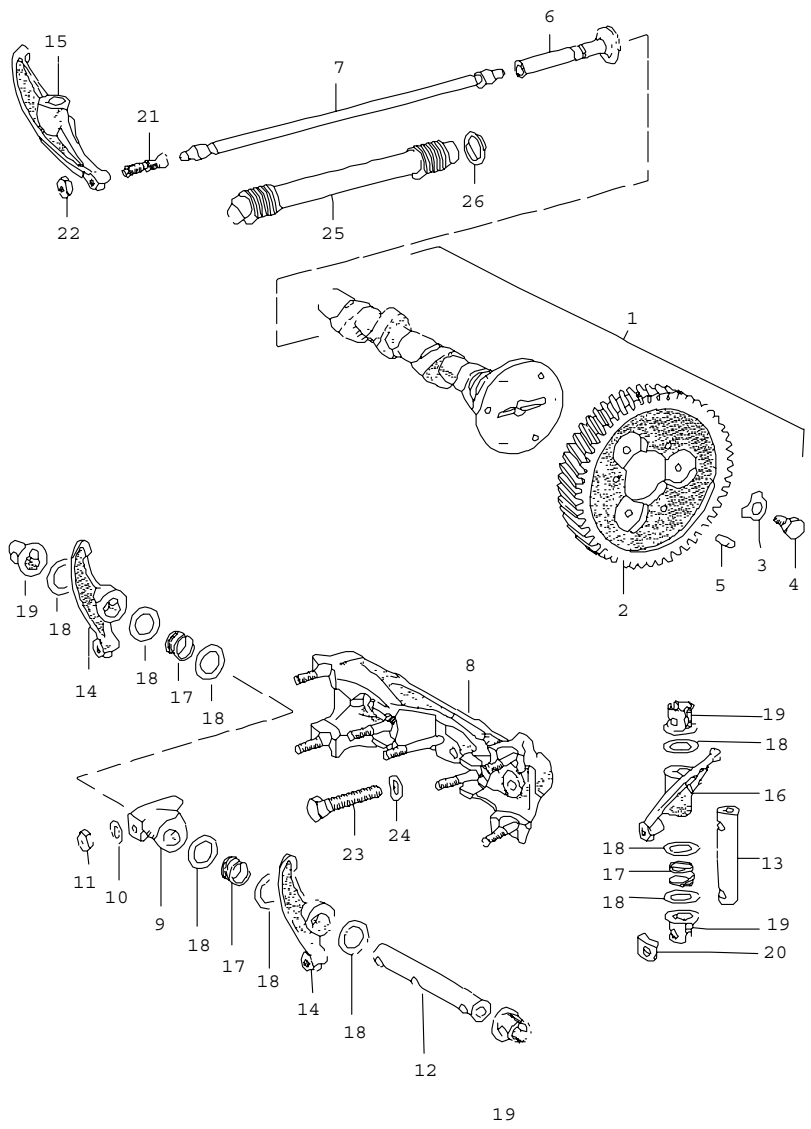

Pos	Part Number	Name	Remarks	Qty	Model
		camshaft			1600 S/S90 1600 C/SC
1	616 105 012 01	camshaft complete with gear wheel size 0		1	1600 S/S90 1600 SC
1	616 105 012 11	camshaft complete with gear wheel -1		1	1600 S/S90
1	616 105 012 21	camshaft complete with gear wheel -2		1	1600 S/S90 1600 SC
1	616 105 012 31	camshaft complete with gear wheel +1		1	1600 S/S90 1600 SC
1	616 105 012 41	camshaft complete with gear wheel +2		1	1600 S/S90 1600 SC
1	616 105 014 00	camshaft complete with gear wheel size 0		1	1600 C
1	616 105 014 10	camshaft complete with gear wheel -1		1	1600 C
1	616 105 014 20	camshaft complete with gear wheel -2		1	1600 C
1	616 105 014 30	camshaft complete with gear wheel +1		1	1600 C

Pos	Part Number	Name	Remarks	Qty	Model
1	616 105 014 40	camshaft complete with gear wheel +2		1	1600 C
2	616 105 103 01	gear wheel size 0 aluminium		1	
2	616 105 103 11	gear wheel -1 aluminium		1	
2	616 105 103 21	gear wheel -2 aluminium		1	
2	616 105 103 31	gear wheel +1 aluminium		1	
2	616 105 103 41	gear wheel +2 aluminium		1	
3	999 039 001 00	tab washer M 8 X 13		3	
4	E 900 075 453 00	hexagon-head bolt M 8 X 16		3	
5	N 013 199 1	straight pin 6 X 12		3	
6	539 05 210	cam follower (RCC)		8	
7	E 616 105 026 00	valve pushrod 53 GR for cylinder aluminium for cylinder - FERRAL- valid up to: M >> 811 361 not for (D)(S) M >> 820 640		8	 1600 S/S90 1600 SC 1600 SC (D)(S): 1600SC

Pos	Part Number	Name	Remarks	Qty	Model
(7)	616 105 028 02	valve pushrod 65 GR for cylinder grey cast iron for cylinder - BIRAL- valid from: M 811 362 >> not for (D)(S) M 820 641 >>		8	 1600 S/S90/C 1600 SC 1600 SC (D)(S): 1600 SC
8	616 105 031 03	rocker arm bridge complete		2	
9	616 105 305 00	bearing bracket for rocker shaft long		2	
10	900 028 004 00	spring washer A 8		12	
(10)	900 025 007 02	washer 8,4		2	
11	E 900 158 001 01	nut M 8		12	
12	616 105 321 00	rocker shaft long		2	
13	616 105 325 00	rocker shaft short		4	
14	616 105 037 00	rocker arm		4	
15	616 105 034 01	rocker arm long		2	
16	616 105 033 01	rocker arm short		2	
17	616 105 331 00	spring		8	
18	539 05 235	thrust washer		24	
19	616 105 312 00	spacer rocker shaft		12	
20	616 105 314 00	washer		12	
21	E 369 05 243	adjusting screw		8	
22	900 078 011 00	nut 12 SW 8 X 1		8	

Pos	Part Number	Name	Remarks	Qty	Model	Pos	Part Number	Name	Remarks	Qty	Model
23	N 010 445 2	hexagon-head bolt M 10 X 45		6							
24	900 028 005 00	spring washer A 10		6							
25	PCG 105 231 00	protective tube		8							
26	539 05 207	gasket		16							
		- -- E N D -- -									

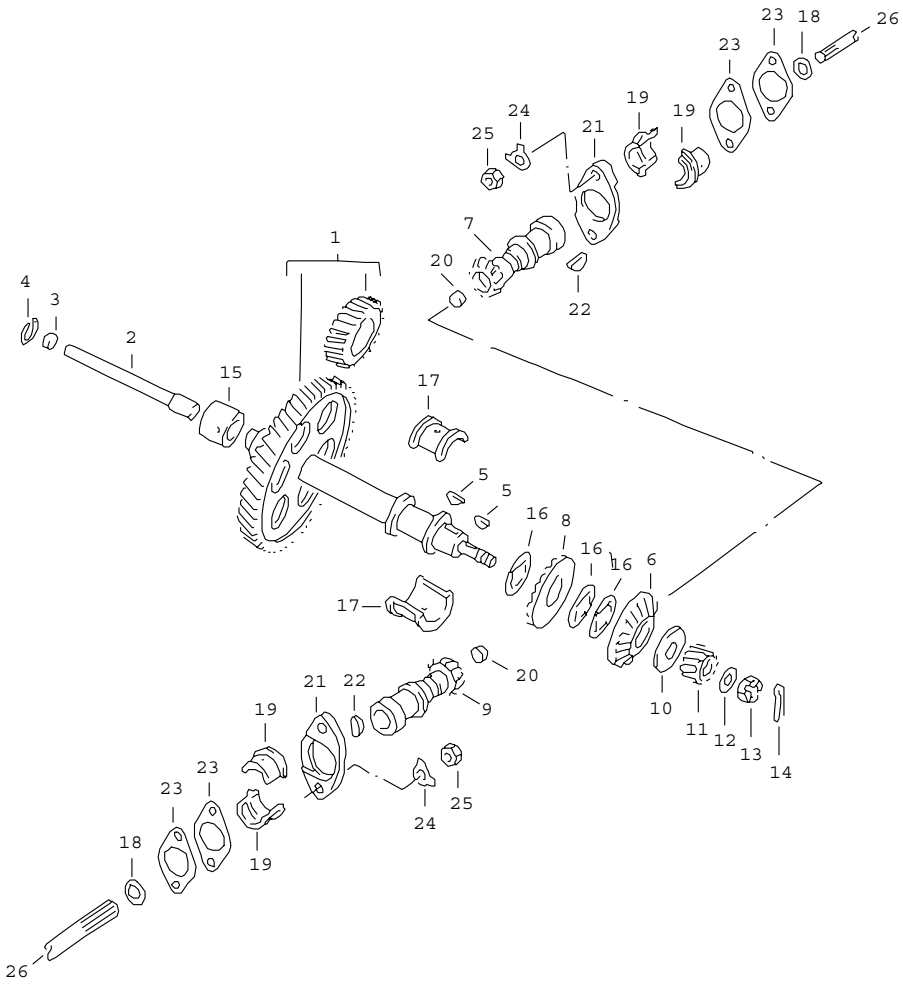

Pos	Part Number	Name	Remarks	Qty	Model
		driving mechanism for valve control			CARRERA
-	587 105 901 00	set of wheels, compl. for valve control comprising: set A + D set B , C , E , F see illustrations 1/03/20		1	587/1/2
-	547 05 001	set of wheels, compl. for valve control comprising: set A + D set B , C , E , F see illustrations 1/03/20		1	692/3/3A
1	692 105 901 00	intermediate shaft with timing gear		1	587/1/2
(1)	E 547 05 285 1	intermediate shaft with timing gear		1	692/3/3A
2	E 547 05 247	filler rod wood		1	
3	E 547 05 248	plug		1	
4	900 042 003 01	circlip 20 X 1		1	
5	N 012 713 1	woodruff key 5 X 6,5		2	
-	547 05 022	set A comprising: picture 6 , 7		1	
-	547 05 025	set D comprising: picture 8 , 9		1	

Pos	Part Number	Name	Remarks	Qty	Model
6	547 05 234 2	bevel pinion A only together with picture 7		1	
7	547 05 223 1	pinion A only together with picture 6		1	
8	547 05 234 1	bevel pinion D only together with picture 9		1	
9	547 05 223 2	pinion D only together with picture 8		1	
10	E 547 05 268	thrust washer		1	
11	E 692 107 153 00	gear wheel oil pump		1	
12	E 547 05 269	washer		1	
13	E 547 05 286	castle nut		1	
14	N 012 532 1	cotter pin 3 X 25		1	
15	547 05 288 0	bearing sleeve		1	
16	547 05 297	shim 0,05 MM		X	
(16)	547 05 298	shim 0,08 MM		X	
(16)	547 05 299	shim 0,10 MM		X	
(16)	547 05 300	shim 0,35 MM		X	
17	547 05 912	bearing shell set		1	
18	547 05 246	o-ring		2	
19	547 05 913	bearing shell set		2	
20	E 547 05 301	plug		2	
21	E 547 05 236	flange		2	
22	N 012 706 1	spring 3 X 6,5		2	
23	547 05 270	shim 0,05 MM		X	
(23)	547 05 271	shim 0,08 MM		X	
(23)	547 05 272	shim 0,10 MM		X	
(23)	547 05 273	shim 0,35 MM		X	
24	999 039 001 00	tab washer		4	
25	502 08 310	hexagon nut		4	
26	-	see group 1/03/20		*	

- -- E N D -- -

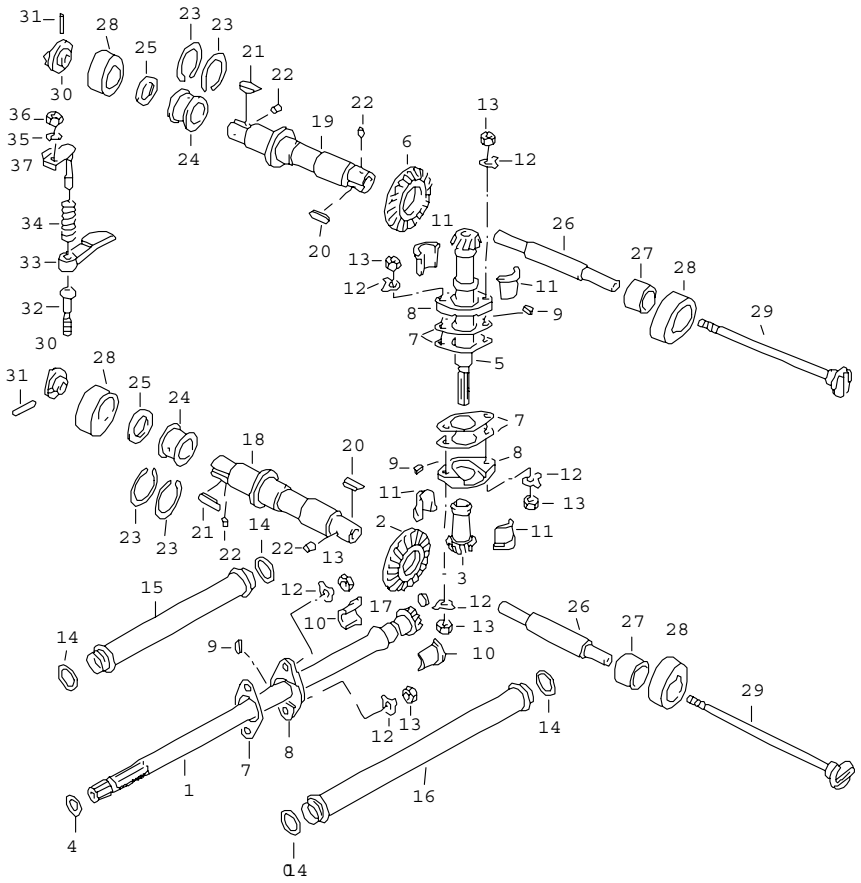

Pos	Part Number	Name	Remarks	Qty	Model
		valve control			CARRERA
-	587 105 904 00	set B comprising: picture 1 , 2 , 3 cylinder 1 and cylinder 2		1	587/1/2
-	547 05 023	set B comprising: picture 1 , 2 , 3 cylinder 1 and cylinder 2		1	692/3/3A
-	587 105 903 00	set E comprising: picture 1 , 2 , 3 cyl. 3 and cyl. 4		1	587/1/2
-	547 05 026	set E comprising: picture (1), (2), (3) cyl. 3 and cyl. 4		1	692/3/3A
-	547 05 024	set C comprising: picture 5 , 6 cylinder 1 and cylinder 2		1	
-	547 05 027	set F comprising: picture (5) , (6) cyl. 3 and cyl. 4		1	

Pos	Part Number	Name	Remarks	Qty	Model
1	587 105 161 01	vertical shaft long B cylinder 1 and cylinder 2 only together with picture 2 , 3		1	587/1/2
(1)	547 05 224 1	vertical shaft long B cylinder 1 and cylinder 2 only together with picture 2 , 3		1	692/3/3A
(1)	587 105 161 02	vertical shaft long E cyl. 3 and cyl. 4 only together with picture 2 , 3		1	587/1/2
(1)	547 05 224 2	vertical shaft long E cyl. 3 and cyl. 4 only together with picture (2) , (3)		1	692/3/3A
2	547 05 235 2	bevel pinion B cylinder 1 and cylinder 2 only together with picture 1 , 3		1	
(2)	547 05 235 1	bevel pinion E cyl. 3 and cyl. 4 only together with picture (1) , (3)		1	
3	547 05 226 1	pinion B cylinder 1 and cylinder 2 only together with picture 1 , 2		1	
(3)	547 05 226 2	pinion E cyl. 3 and cyl. 4 only together with picture (1) , (2)		1	
4	547 05 246	o-ring		2	
5	547 05 225 2	vertical shaft short C cylinder 1 and cylinder 2 only together with picture 6		1	
(5)	547 05 225 1	vertical shaft short F cyl. 3 and cyl. 4 only together with picture (6)		1	
6	547 05 235 1	bevel pinion C cylinder 1 and cylinder 2 only together with picture 5		1	
(6)	547 05 235 2	bevel pinion F cyl. 3 and cyl. 4 only together with picture (5)		1	

Pos	Part Number	Name	Remarks	Qty	Model
7	547 05 270	shim 0,05 MM		X	
(7)	547 05 271	shim 0,08 MM		X	
(7)	547 05 272	shim 0,10 MM		X	
(7)	547 05 273	shim 0,35 MM		X	
8	E 547 05 236	flange		6	
9	N 012 706 1	spring		6	
10	547 05 913	bearing shell		8	
11	547 05 913	bearing shell		8	
12	999 039 001 00	tab washer		X	
13	502 08 310	hexagon nut		X	
14	547 05 244	o-ring		8	
15	E 587 105 335 00	protective tube short		2	587/1/2
(15)	E 547 05 309	protective tube short		2	692/3/3A
16	E 587 105 336 00	protective tube long		2	587/1/2
(16)	E 547 05 310	protective tube long		2	692/3/3A
17	E 547 05 301	plug		2	
18	E 547 05 277	camshaft exhaust		2	
19	E 547 05 276	camshaft intake		2	
20	E 692 105 182 01	key for camshaft intake exhaust cylinder 1 and cylinder 2		2	587/1/2
(20)	900 117 006 00	key A 6 X 4 X 20 for camshaft intake exhaust cylinder 1 and cylinder 2		2	692/3/3A
20	E 692 105 182 00	key for camshaft intake exhaust cyl. 3 and cyl. 4		2	587/1/2
(20)	E 900 117 005 00	key A 6 X 4 X16 for camshaft intake exhaust cyl. 3 and cyl. 4		2	692/3/3A
21	E 692 105 181 01	key for camshaft intake exhaust cylinder 1 and cylinder 2		2	587/1/2
(21)	E 547 05 283	key short camshaft intake exhaust cylinder 1 and cylinder 2		2	692/3/3A
21	E 692 105 181 02	key camshaft intake exhaust cyl. 3 and cyl. 4		2	587/1/2

Pos	Part Number	Name	Remarks	Qty	Model
(21)	547 05 282	key long camshaft intake exhaust cyl. 3 and cyl. 4		2	692/3/3A
22	E 547 05 284	plug		8	
23	547 05 293	shim 0,05 MM		X	
(23)	547 05 294	shim 0,08 MM		X	
(23)	547 05 295	shim 0,10 MM		X	
(23)	547 05 296	shim 0,35 MM		X	
24	E 587 105 131 00	bearing sleeve		4	587/1/2
(24)	547 05 230	bearing sleeve		4	692/3/3A
25	E 547 05 262	spacer		4	
26	E 547 05 278	filler rod camshaft exhaust		4	
(26)	E 692 105 186 01	filler rod camshaft intake		2	587/1/2
27	587 105 132 00	bearing sleeve		4	587/1/2
(27)	547 05 306	bearing sleeve		4	692/3/3A
28	547 05 266	control cam intake exhaust		8	587/1/2 692/3
(28)	547 05 266	control cam exhaust		4	692/3A
(28)	692 105 115 00	control cam intake		4	587/2/692/3A
29	E 692 105 150 01	driver with stud		2	587/1/2
(29)	E 547 05 281	driver with stud		4	692/3/3A
30	E 692 105 151 00	driver		2	587/1/2
-	930 101 174 01	stud		2	587/1/2
(30)	E 547 05 279	driver		4	692/3/3A
-	E 900 080 004 00	stud		4	692/3/3A
31	E 900 095 030 00	roll pin 3 X 14		2	587/1/2
(31)	E 900 095 003 00	roll pin 2,5 X 16		8	692/3/3A
32	547 05 319	adjusting screw		8	
33	547 05 219 1	valve lever		8	587/1/2
-	547 05 312	bracket with bolt		8	587/2
(33)	547 05 219	valve lever		8	
34	547 05 263	valve lever spring		8	
35	900 028 008 01	spring washer B 6		8	587/1/2
(35)	900 028 008 00	spring washer B 6		8	692/3/3A
36	900 076 010 02	hexagon nut M 6		8	587/1/2
(36)	900 076 010 02	hexagon nut M 6		8	692/3/3A
37	547 05 312	bracket complete		8	
-	547 05 312	bracket		8	

- -- E N D -- -

Model	Year	MG	SG	Illustration	Restrictions	Update	12:55	27.10.2005	PORSCHE PET PORSCHE
356	65	1	03	103-25		194			

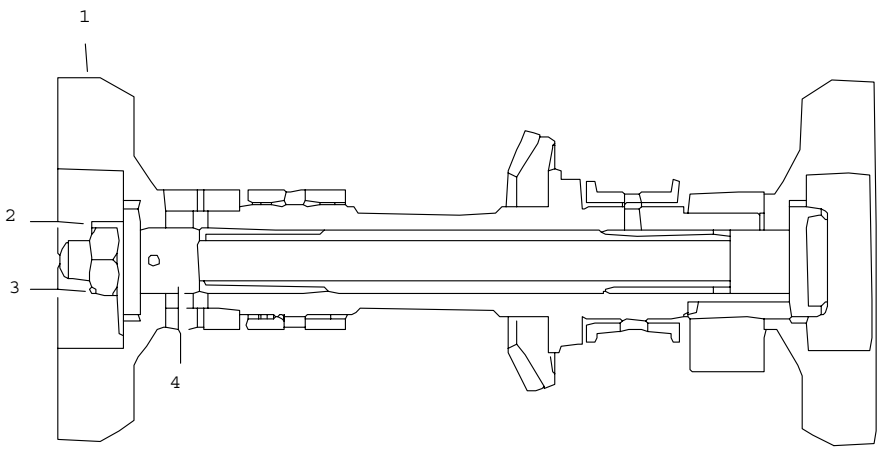

Pos	Part Number	Name	Remarks	Qty	Model
		flywheel weights for camshaft intake			CARRERA 587/1/2
1	E 692 105 141 02	flywheel weights		4	
2	E 692 105 142 00	tab washer		2	
3	N 011 011 5	hexagon nut M 10 X 1		2	
4	E 692 105 146 00	guide bush		2	
		- -- E N D -- -			

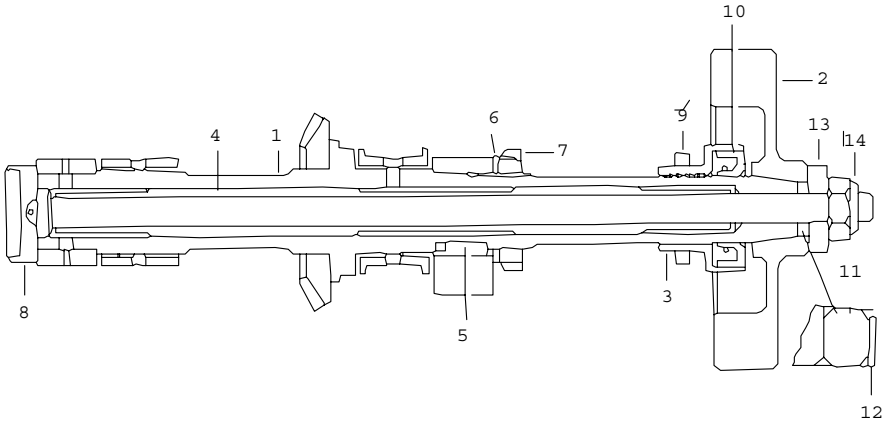

Pos	Part Number	Name	Remarks	Qty	Model
		camshaft and flywheel weights intake cylinder 1 + 2 and cylinder 3 + 4			CARRERA ABARTH REUTTER 692/3/3A
1	E 692 105 103 05	camshaft intake		2	
2	E 692 105 141 01	flywheel weights		2	
3	E 692 105 144 00	guide bush		2	
4	E 692 105 185 01	filler piece		2	
5	E 692 105 181 00	key		2	
6	900 160 001 00	tab washer A 24		2	
7	E 900 159 001 00	grooved nut M 24 X 1,5		2	
8	692 105 150 02	driver		2	
-	E 692 105 171 02	stud		2	
-	E 900 095 003 00	roll pin		2	
9	547 05 244	sealing ring		2	
10	E 999 113 004 50	shaft seal 21 X 40 X 8		2	
11	E 999 701 009 50	o-ring		2	
12	E 999 031 006 00	washer		X	
13	E 692 105 143 01	washer		2	
14	E 900 084 007 02	lock nut M 10 X 1 deleted parts for subsequent installat. see group 1/03/20 picture 19 , 26, (26) and stud 900 080 004 00		2	
		- -- E N D -- -			

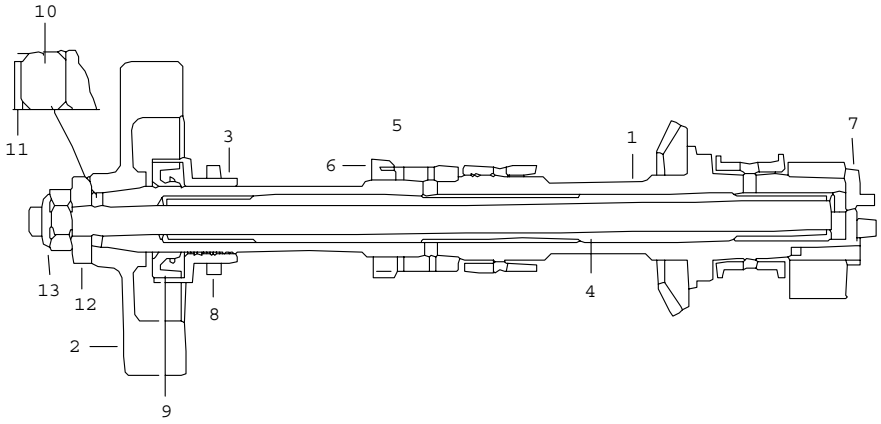

Pos	Part Number	Name	Remarks	Qty	Model
		camshaft and flywheel weights intake cylinder 1 + 2			CARRERA REUTTER 692/3/3A
1	E 692 105 103 04	camshaft intake		1	
2	E 692 105 141 01	flywheel weights		2	
3	E 692 105 144 00	guide bush		2	
4	E 692 105 185 01	filler piece		2	
5	900 160 001 00	tab washer A 24		2	
6	E 900 159 001 00	grooved nut M 24 X 1,5		2	
7	692 105 150 02	driver		2	
-	E 692 105 171 02	stud		2	
-	E 900 095 003 00	roll pin		2	
8	547 05 244	o-ring		2	
9	E 999 113 004 50	shaft seal 21 X 40 X 8		2	
10	E 999 701 009 50	o-ring		2	
11	E 999 031 006 00	washer		X	
12	E 692 105 143 01	washer		2	
13	E 900 084 007 02	lock nut M 10 X 1 deleted parts for subsequent installat. see group 1/03/20 picture 19 , 26 , (26) and stud 900 080 004 00		2	
		- -- E N D -- -			

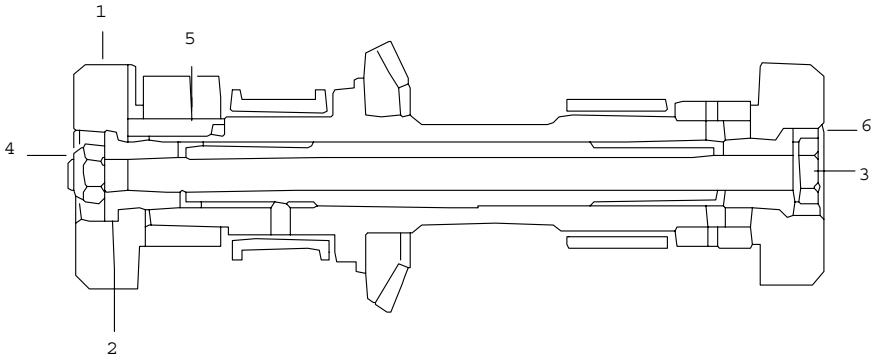

Pos	Part Number	Name	Remarks	Qty	Model
		flywheel weights for camshaft exhaust			CARRERA 587/1/2 692/3/3A
1	E 547 105 141 00	flywheel weights		4	587/1 692/3/3A
(1)	E 547 105 141 01	flywheel weights		4	587/2
2	E 547 105 142 00	guide bush		4	587/1 692/3/3A
(2)	E 547 105 142 01	guide bush		4	587/2
3	E 900 074 053 00	hexagon-head bolt M 8 X 170		2	587/1
(3)	E 900 155 012 01	hexagon-head bolt M 10 X 170		2	587/2
(3)	E 900 074 053 00	hexagon-head bolt M 8 X 170		2	692/3/3A
4	E 900 801 001 02	hexagon nut M 8		2	587/1
(4)	E 900 801 002 02	hexagon nut M 10		2	587/2
(4)	E 900 801 001 02	hexagon nut M 8		2	692/3/3A
5	547 05 282	key		1	692/3/3A
6	900 117 006 00	key A 6 X 4 X 20 deleted parts for subsequent installat. see group 1/03/20 picture (20),(21),(29),(30),(31)		1	692/3/3A
		- -- E N D -- -			

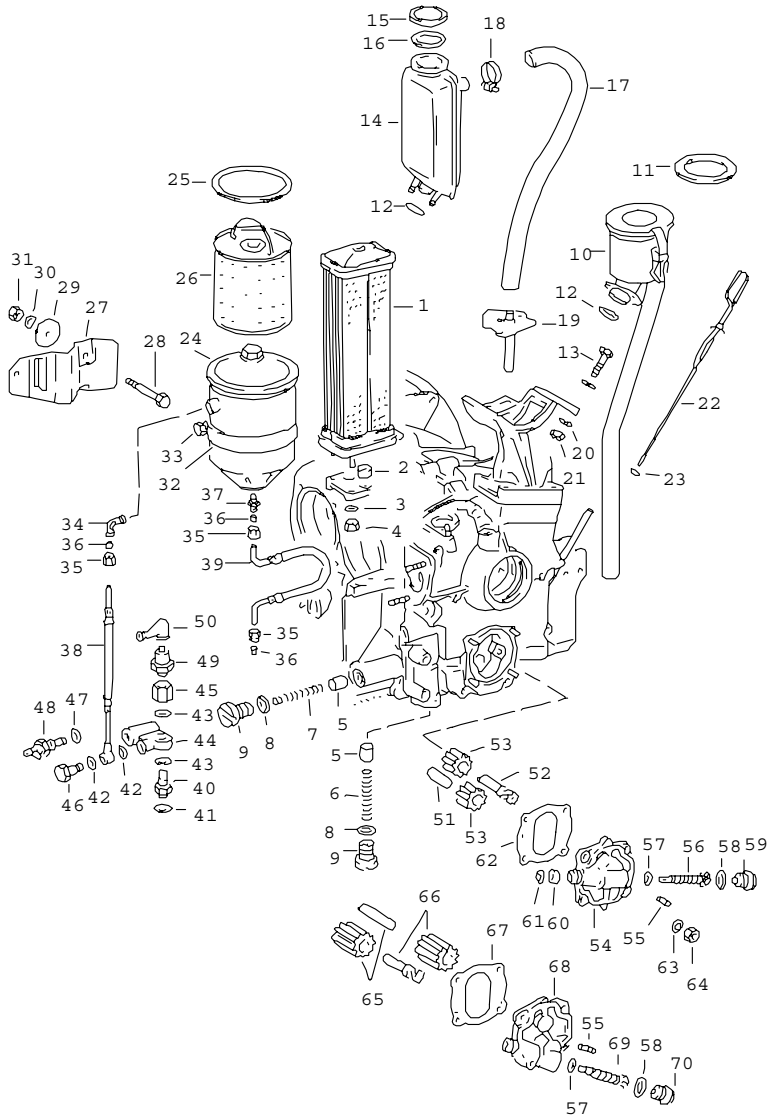

Pos	Part Number	Name	Remarks	Qty	Model
		engine lubrication			356 B/C
1	616 107 041 02	oil cooler		1	
1	PCG 107 912 50	oil cooler installation set		1	
2	616 01 123	sealing ring		2	
3	N 012 226 5	spring washer B 6		1	
(3)	E 900 028 004 01	spring washer A 8		2	
4	900 076 010 02	hexagon nut M 6		1	
(4)	502 08 310	hexagon nut		2	
5	616 107 511 00	piston for relief valve		2	
6	999 521 016 00	spring for relief valve		1	
7	999 521 016 00	spring for relief valve		1	
8	E 900 123 025 70	sealing ring C 18 X 24		2	
9	999 064 010 02	screw plug		2	
10	539 07 075	bleeder complete		1	356 B-T5
11	539 07 726	sealing ring		1	356 B-T5
12	000 97 301	sealing ring		1	356 B-T5
12	616 107 792 01	sealing ring		1	356 B-T6/C
13	900 074 014 00	hexagon-head bolt M 6 X 25		2	356 B-T5
14	E 616 107 079 00	bleeder M 611 001 >> M 706 001 >> M 807 001 >>		1	356 B-T6 1600 1600 S 1600 S90
(14)	616 107 079 02	bleeder		1	356 C
15	PCG 207 271 00	cover		1	356 C

Pos	Part Number	Name	Remarks	Qty	Model
16	901 201 272 00	sealing ring M 611 001 >> M 706 001 >> M 807 001 >>		1	356 B-T6/C 1600 1600 S 1600 S90
17	616 107 791 00	connecting hose bleeder air cleaner M 611 001 >> M 706 001 >> M 807 001 >>		1	356 B-T6 1600 1600 S 1600 S90
(17)	E PCG 107 795 00	connecting hose bleeder air cleaner		1	356 C
18	N 024 115 1	hose clamp M 611 001 >> M 706 001 >> M 807 001 >>		2	356 B-T6 1600 1600 S 1600 S90
(18)	999 512 045 02	hose clamp		2	356 C
19	616 106 066 00	cover plate with connecting piece M 611 001 >> M 706 001 >> M 807 001 >>		1	356 B-T6 1600 1600 S 1600 S90
(19)	616 106 645 00	cover plate without connecting piece		1	356 C
20	900 028 008 00	spring washer B 6		2	
21	900 076 010 02	hexagon nut M 6		2	
22	E 616 07 070	oil level dipstick		1	
23	539 07 709	gasket		1	
24	546 07 800	oil filter complete		1	
25	546 07 829	gasket		1	
26	546 07 827	insert		1	
-	900 123 006 25	sealing ring for filter A 12 X 18 CU - FRAM -		1	
-	900 123 019 20	sealing ring for filter A 16 X 22 CU - HENGST -		1	
27	E 546 07 820	support for oil filter		1	
28	E 900 074 083 02	hexagon-head bolt M 6 X 28		2	
29	999 151 003 01	washer		2	
30	900 028 008 00	spring washer B 6		2	
31	900 076 010 02	hexagon nut M 6		2	
32	546 09 301	restraining strap		1	
33	900 074 134 02	hexagon-head bolt M 8 X 45		1	
34	900 106 001 02	screw socket LL 6 M		1	
35	900 104 001 02	union nut ALL 6		3	
36	900 102 001 02	sealing ring LL 6		3	
37	900 105 001 02	screw socket LL 6 M		1	
38	616 07 818	hose		1	
39	539 07 826	hose		1	
40	E 999 135 001 02	screw socket		1	
41	900 123 006 25	sealing ring A 12 X 18 CU		1	
42	N 013 808 3	sealing ring A 10 X 16 CU		2	
43	369 01 111	washer		2	
44	616 07 081	distributing piece		1	
45	616 07 807	intermediate piece		1	
46	616 07 812	banjo bolt		1	

Pos	Part Number	Name	Remarks	Qty	Model
47	900 123 008 30	sealing ring A 14 X 20 ALU		1	
48	616 107 805 01	sender		1	356 B
48	616 107 806 00	remote temperature sensor		1	356 B
48	616 107 805 01	remote temperature sensor 6 V		1	356 C
48	901 741 632 00	remote temperature sensor 12 V		1	356 C
49	901 613 571 01	oil pressure switch		1	
50	999 659 011 50	protection cap		1	
51	E 539 07 116	roller		1	
		M >> 601 994			1600
		M >> 85 940			1600 S
		M >> 800 149			1600 S90
52	E 539 07 014	drive shaft		1	
		M >> 601 994			1600
		M >> 85 940			1600 S
		M >> 800 149			1600 S90
53	E 539 07 115	oil pump gear		2	
		M >> 601 994			1600
		M >> 85 940			1600 S
		M >> 800 149			1600 S90
54	E 539 07 111	cover		1	
		M >> 601 994			1600
		M >> 85 940			1600 S
		M >> 800 149			1600 S90
55	N 013 207 1	pin		2	
56	E 369 05 702	pinion		1	
		M >> 601 994			1600
		M >> 85 940			1600 S
		M >> 800 149			1600 S90
57	369 05 718	thrust washer 0,8 MM		X	
(57)	369 05 719	thrust washer 0,6 MM		X	
(57)	369 05 720	thrust washer 0,5 MM		X	
58	900 123 010 20	sealing ring A 20 X 24 CU		1	
59	E 369 05 703	pressure screw		1	
		M >> 601 994			1600
		M >> 85 940			1600 S
		M >> 800 149			1600 S90
60	539 07 117	sealing ring		1	
61	369 05 707	washer		1	
62	E 539 07 109	gasket		1	
		M >> 601 994			1600
		M >> 85 940			1600 S
		M >> 800 149			1600 S90
63	N 012 226 5	spring washer B 6		4	
64	900 076 010 02	hexagon nut M 6		4	
(64)	900 075 014 02	hexagon-head bolt M 6 X 18		1	
		M 731 968 >>			(D)(S): 1600 C
		M 820 997 >>			(D)(S): 1600 SC
		M 713 689 >>			1600 C
		M 812 145 >>			1600 SC
65	616 107 016 00	oil pump shaft I with oil pump gear		1	
		M 601 995 >>			1600
		M 85 941 >>			1600 S
		M 800 150 >>			1600 S90
66	616 107 015 00	oil pump shaft II with oil pump gear		1	
		M 601 995 >>			1600
		M 85 941 >>			1600 S
		M 800 150 >>			1600 S90
(66)	616 107 017 00	oil pump shaft II with oil pump gear		1	
		M 731 968 >>			(D)(S): 1600 C
		M 820 997 >>			(D)(S): 1600 SC
		M 713 689 >>			1600 C
		M 812 145 >>			1600 SC

Pos	Part Number	Name	Remarks	Qty	Model
67	616 107 902 01	gasket M 601 995 >> M 85 941 >> M 800 150 >>		1	 1600 1600 S 1600 S90
67	616 107 902 01	gasket M 731 968 >> M 820 997 >> M 713 689 >> M 812 145 >>		1	 (D)(S): 1600 C (D)(S): 1600 SC 1600 C 1600 SC
68	616 107 107 01	cover M 601 995 >> M 85 941 >> M 800 150 >>		1	 1600 1600 S 1600 S90
(68)	616 107 108 01	cover M 731 968 >> M 820 997 >> M 713 689 >> M 812 145 >>		1	 (D)(S): 1600 C (D)(S): 1600 SC 1600 C 1600 SC
69	E 616 118 205 01	pinion M 601 995 >> M 85 941 >> M 800 150 >>		1	 1600 1600 S 1600 S90
70	616 107 109 00	pressure screw M 601 995 >> M 85 941 >> M 800 150 >>		1	 1600 1600 S 1600 S90
-	900 901 010 05	locking wire		1	
		- -- E N D -- -			

Pos	Part Number	Name	Remarks	Qty	Model

Model	Year	MG	SG	Illustration	Restrictions	Update			
356	65	1	04	104-05		194	12:57	27.10.2005	PORSCHE PET PORSCHE

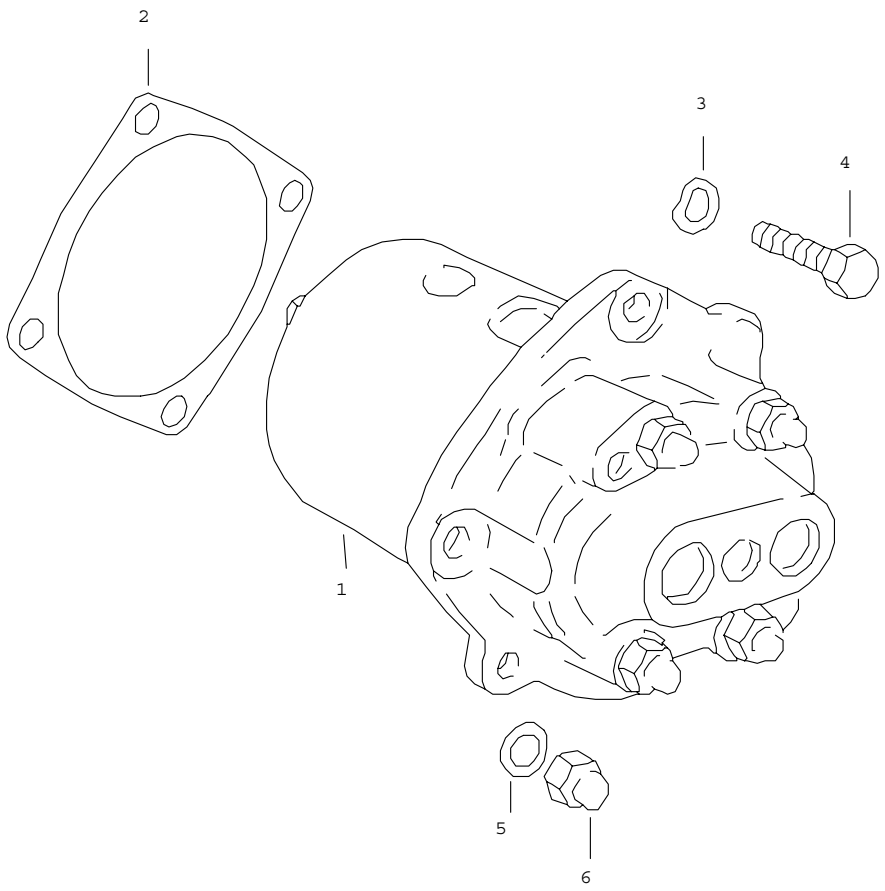

Pos	Part Number	Name	Remarks	Qty	Model
		oil pump			CARRERA 587/1/2
1	E 587 107 002 00	oil pump complete		1	
2	547 107 111 00	gasket		1	
3	900 028 008 01	spring washer B 6		4	
4	900 075 014 02	hexagon-head bolt M 6 X 18		4	
5	E 900 123 032 20	sealing ring A 6,5 X 11		4	
6	E 900 085 003 02	cap nut M 6		4	
		- -- E N D -- -			

Model	Year	MG	SG	Illustration	Restrictions	Update			
356	65	1	04	104-10		194	12:57	27.10.2005	PORSCHE PET PORSCHE

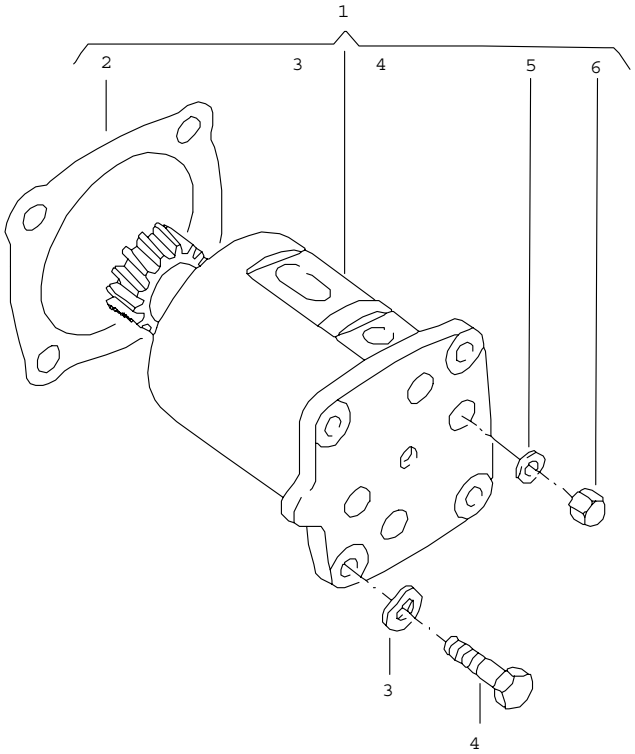

Pos	Part Number	Name	Remarks	Qty	Model
		oil pump			CARRERA 692/3/3A
1	E 692 107 010 01	oil pump complete		1	
2	547 107 111 00	gasket		1	
3	900 028 008 01	spring washer B 6		4	
4	900 075 014 02	hexagon-head bolt M 6 X 18		4	
5	E 900 123 001 20	sealing ring A 6 X 12		4	
6	900 070 002 02	cap nut M 6		4	
		- -- E N D -- -			

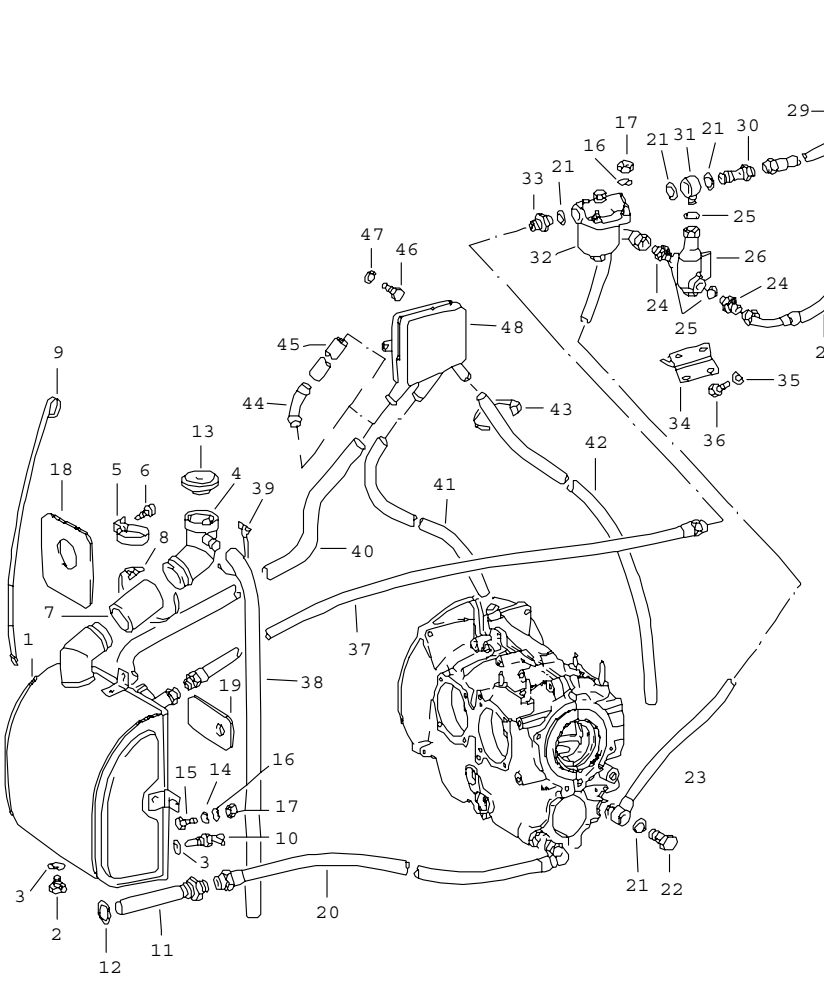

Pos	Part Number	Name	Remarks	Qty	Model
		engine lubrication			CARRERA 587/1/2 692/3/3A
1	E 692 107 063 01	oil tank complete		1	
2	900 124 002 02	screw plug AM 14 X 1,5		1	587/1/2
(2)	E 900 124 003 00	screw plug CM 14 X 1,5		1	692/3/3A
3	900 123 007 30	sealing ring A 14 X 18		2	
4	E 692 107 620 00	filler neck		1	
5	E 547 07 507 1	clip		1	
6	E 900 014 021 02	pan-head screw M 6 X 15		1	587/1/2
(6)	E 900 014 021 00	pan-head screw M 6 X 15		1	692/3/3A
7	E 547 107 921 01	hose piece		1	
8	E 999 512 107 02	hose clamp 9 X 440		2	
9	E 547 07 535 1	oil level dipstick		1	
10	616 107 805 01	remote temperature sensor 6 V		1	587/1/2 692/3/3A
(10)	901 741 632 00	remote temperature sensor 12 V		1	587/1/2
11	E 547 07 055	strainer complete		1	
12	E 900 123 016 30	sealing ring A 30 X 38		1	
13	PCG 207 271 00	fuel tank cap		1	
14	900 025 007 02	washer 8,4		3	
15	999 093 010 02	hexagon-head bolt M 8 X 20		3	
16	900 027 015 02	lock ring B 8		5	
17	900 076 013 02	hexagon nut M 8		3	

Pos	Part Number	Name	Remarks	Qty	Model
18	E 547 07 544 1	covering plate		1	
19	E 692 107 941 00	covering plate		2	
20	E 692 107 301 00	oil hose		1	
21	900 123 011 30	sealing ring A 22 X 29 soft		6	
22	E 900 134 003 02	banjo bolt A 16		1	
23	E 692 107 321 01	oil hose		1	587/1/2 REUTTER
(23)	E 692 107 321 02	oil hose		1	692/3/3A ABARTH
24	E 900 136 002 02	union A 13		3	
25	900 123 009 30	sealing ring A 18 X 24 soft		3	
26	E 692 107 741 00	oil thermostat		1	
27	E 692 107 325 01	oil hose		1	587/1/2
(27)	692 107 327 01	oil hose		1	692/3/3A REUTTER
(27)	692 107 327 02	oil hose		1	692/3/3A ABARTH
28	900 099 001 02	threaded joint EL 15		2	
29	E 692 107 326 01	oil hose		1	587/1/2 692/3/3A REUTTER
(29)	692 107 326 02	oil hose		1	692/3/3A ABARTH
30	E 692 107 291 00	screw socket		1	
31	E 999 215 001 02	socket piece M 6 X 25		4	
32	PCG 107 494 00	oil filter		1	
33	E PCG 107 502 00	union 13		1	587/1/2
(33)	E 900 129 001 02	double socket 13		1	692/3/3A

Pos	Part Number	Name	Remarks	Qty	Model
34	E 547 107 250 00	support		1	
35	900 027 014 01	lock ring B 6		4	587/1/2
(35)	900 027 013 01	lock ring B 6		4	692/3/3A
36	E 900 074 088 02	hexagon-head bolt M 6 X 25		4	587/1/2
(36)	900 074 014 01	hexagon-head bolt M 6 X 25		4	692/3/3A
37	E 692 107 335 00	oil hose		1	587/1/2
(37)	E 547 07 403 1	oil hose		1	692/3/3A REUTTER
(37)	692 107 335 01	oil hose		1	692/3/3A ABARTH
38	E 900 181 020 50	hose rubber 20 X 720		1	
39	E 999 512 109 02	hose clamp 5 X 200		1	587/1/2
(39)	E 999 512 201 02	hose clamp 30		1	692/3/3A
40	E 900 181 020 50	hose rubber 20 X 750		1	587/1/2
(40)	E 900 181 020 50	hose rubber 20 X 290		1	692/3/3A
41	E 692 107 739 00	connecting hose		1	
42	E 900 181 020 50	hose rubber 20 X 640		1	
43	E 999 512 041 02	hose clamp		6	587/1/2
(43)	E 999 512 012 02	hose clamp		7	692/3/3A
44	E 692 107 737 00	tube		1	692/3/3A
45	E 900 181 020 50	hose rubber		X	692/3/3A
46	N 010 208 5	hexagon-head bolt M 6 X 8		2	

Pos	Part Number	Name	Remarks	Qty	Model	Pos	Part Number	Name	Remarks	Qty	Model
47	900 027 014 01	lock ring B 6		2	587/1/2						
(47)	900 027 013 01	lock ring B 6		2	692/3/3A						
48	E 692 107 079 01	bleeder container complete		1							
		- -- E N D -- -									

Model	Year	MG	SG	Illustration	Restrictions	Update	12:57	27.10.2005	PORSCHE PET PORSCHE
356	65	1	04	104-20		194			

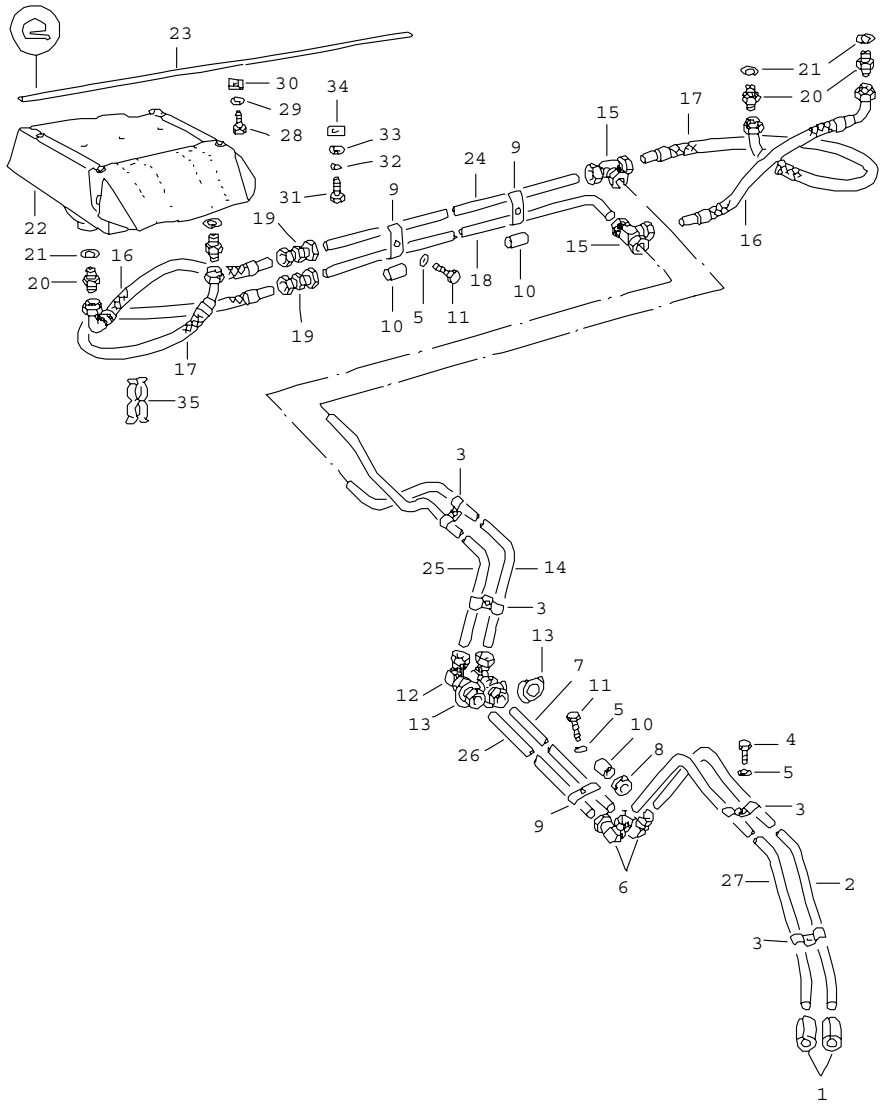

Pos	Part Number	Name	Remarks	Qty	Model
		oil pipe oil cooler			CARRERA 587/1/2
1	999 181 005 50	hose piece		2	
2	E 692 107 387 01	pipeline VII complete		1	
3	E 692 107 363 00	clamp		4	
4	900 075 078 02	hexagon-head bolt M8 X 15		4	
5	900 027 015 02	lock ring B8		13	
6	900 099 002 02	threaded joint KL 15		2	
7	E 692 107 385 00	pipeline V 14,7 X 1,3 MM		1	
8	E 999 702 038 50	rubber sleeve 14 X 23 X 7		2	
9	E 692 107 357 00	holder		3	
10	E 999 181 004 50	hose piece 14 X 18 X 30		6	
11	900 074 037 02	hexagon-head bolt M8 X 35		2	
12	900 099 004 02	threaded joint UL 15		2	
13	E 692 107 365 00	seat		4	
14	E 587 107 383 00	pipeline 14,7 X 1,3 MM		1	
15	900 099 003 02	t-connecting socket QL 15		2	
16	E 692 107 325 00	oil hose for oil cooler		2	
17	E 587 107 325 00	oil hose for oil cooler		2	
18	E 587 107 381 00	pipeline		1	
19	900 099 001 02	threaded joint EL 15		2	

Pos	Part Number	Name	Remarks	Qty	Model
20	E 900 136 002 02	union A 13		4	
21	900 123 009 30	sealing ring A 18 X 24		4	
22	E 587 107 041 00	oil cooler	/L	1	
22	E 587 107 042 00	oil cooler	/R	1	
23	587 107 491 00	sealing rubber		2	
24	E 587 107 382 00	pipeline		1	
25	E 692 107 384 00	pipeline 14,7 X 1,3		1	
26	E 692 107 386 00	pipeline 14,7 X 1,3		1	
27	E 692 107 388 01	pipeline 14,7 X 1,3		1	
28	N 013 884 5	tapping screw B 4,8 X 13		2	
29	900 025 003 02	washer 5,3		2	
30	999 507 002 02	speed nut		2	
31	999 093 010 02	hexagon-head bolt M8 X 20		4	
32	900 027 015 02	lock ring B 8		4	
33	900 025 007 02	washer 8,4		4	
34	E 644 501 183 00	threaded plate		4	
35	E 999 512 024 02	clamp 17 - 17		2	
		- -- E N D -- -			

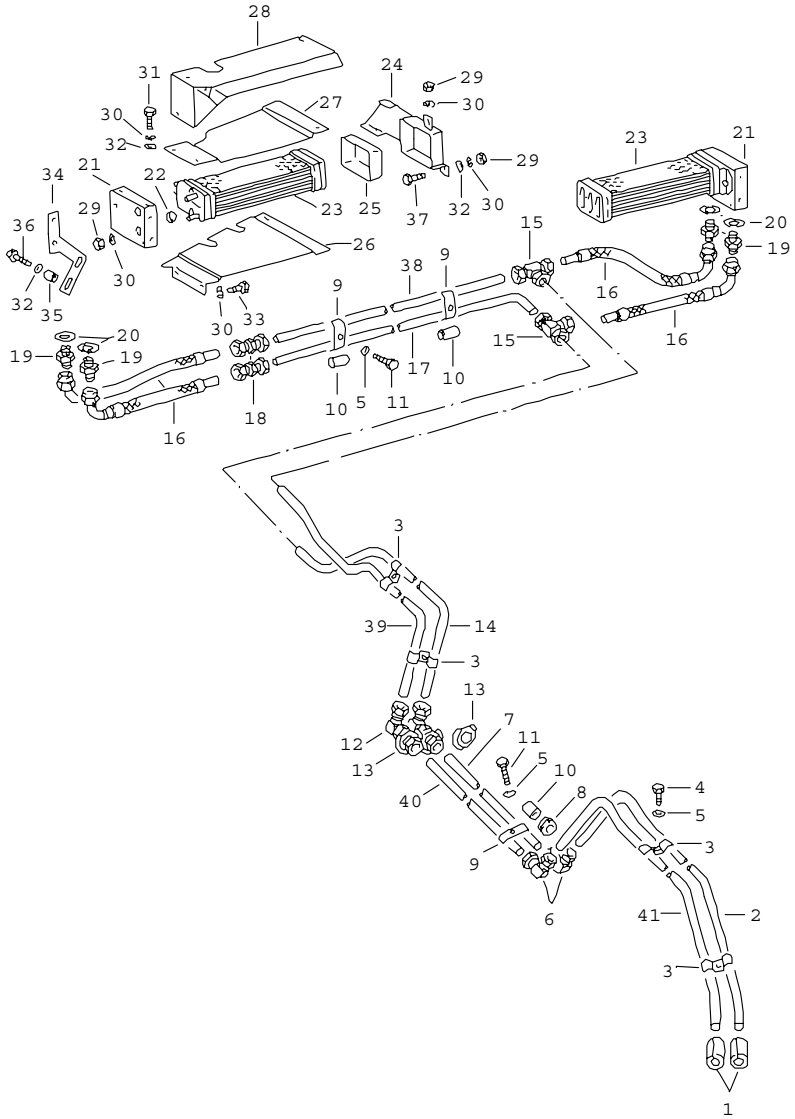

Pos	Part Number	Name	Remarks	Qty	Model
		oil pipe oil cooler			CARRERA REUTTER 692/3/3A
1	999 181 005 50	hose piece		2	
2	E 692 107 387 01	pipeline VII complete		1	
3	E 692 107 363 00	clamp		4	
4	900 075 078 02	hexagon-head bolt M8 X 15		4	
5	900 027 015 02	lock ring B8		13	
6	900 099 002 02	threaded joint KL 15		2	
7	E 692 107 385 00	pipeline V 14,7 X 1,3 MM		1	
8	E 999 702 038 50	rubber sleeve 14 X 23 X 7		2	
9	E 692 107 357 00	holder		3	
10	E 999 181 004 50	hose piece 14 X 18 X 30		6	
11	900 074 037 02	hexagon-head bolt M8 X 35		2	
12	900 099 004 02	threaded joint UL 15		2	
13	E 692 107 365 00	seat		4	
14	E 692 107 383 00	pipeline 14,7 X 1,3 MM		1	
15	900 099 003 02	t-connecting socket QL 15		2	
16	E 692 107 325 01	oil hose for oil cooler		4	
17	692 107 381 01	pipeline		1	
18	900 099 001 02	threaded joint EL 15		2	
19	E 900 136 002 02	union A 13		4	

Pos	Part Number	Name	Remarks	Qty	Model
20	E 999 030 001 10	tab washer		4	
21	E 692 107 401 01	plate oil cooler	/L	2	
22	616 01 123	sealing ring rubber		4	
23	616 07 017	oil cooler complete		2	
24	E 692 107 043 01	bearing oil cooler	/L	1	
(24)	E 692 107 044 01	bearing oil cooler	/R	1	
25	E 692 107 491 00	rubber ply		2	
26	E 692 107 415 01	air duct lower	/L	1	
(26)	E 692 107 416 01	air duct lower	/R	1	
27	E 692 107 411 01	air duct upper	/L/V	1	
(27)	E 692 107 412 01	air duct upper	/R/V	1	
28	E 692 107 413 01	air duct upper	/L/H	1	
(28)	E 692 107 414 01	air duct upper	/R/H	1	
29	900 076 010 02	hexagon nut M 6		18	
30	900 027 013 01	lock ring B 6		30	
31	900 075 010 02	hexagon-head bolt M 6 X 12		6	
32	999 025 108 02	washer 6,4		24	
33	N 010 210 13	hexagon-head bolt M 6 X 10		4	
34	E 692 107 461 01	bracket oil cooler		2	
35	E 692 107 463 00	spacer sleeve for oil cooler mount		4	
36	900 075 020 02	hexagon-head bolt M 6 X 45		4	
37	900 075 014 02	hexagon-head bolt M 6 X 18		2	
38	692 107 382 01	pipeline 14,7 X 1,3		1	
39	E 692 107 384 00	pipeline 14,7 X 1,3		1	
40	E 692 107 386 00	pipeline 14,7 X 1,3		1	
41	E 692 107 388 01	pipeline 14,7 X 1,3		1	

- -- E N D -- -

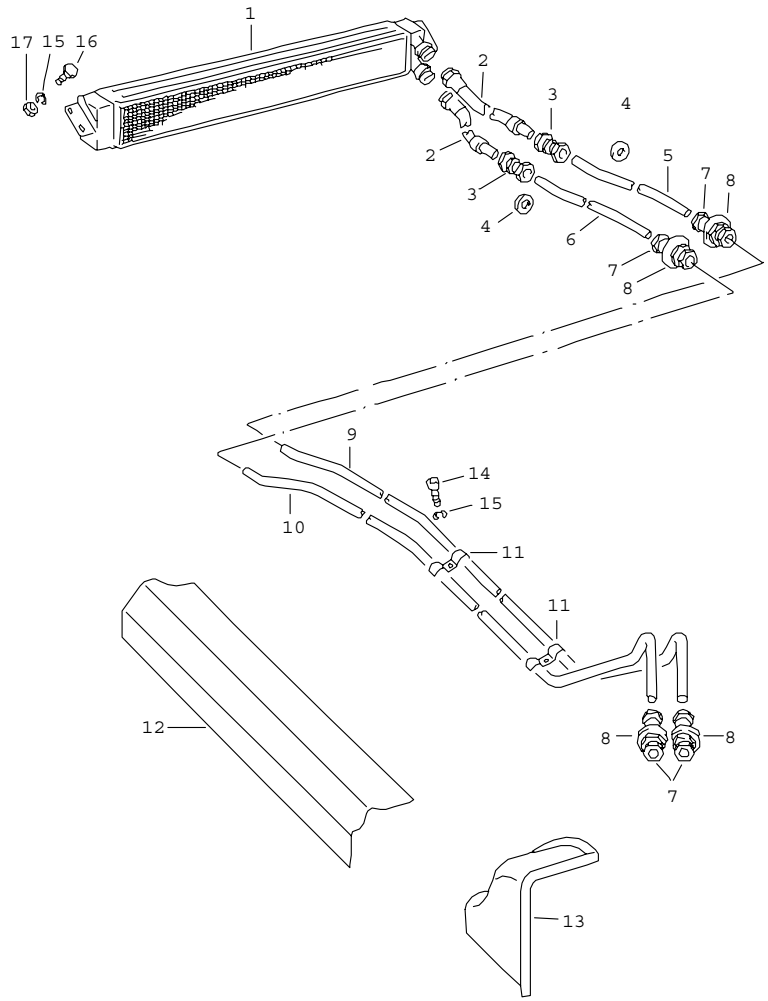

Pos	Part Number	Name	Remarks	Qty	Model
		oil pipe oil cooler			CARRERA ABARTH 692/3/3A
1	E 692 107 041 00	oil cooler		1	
2	692 107 325 02	oil hose		2	
3	900 099 001 02	threaded joint EL 15		2	
4	E 999 702 038 50	rubber sleeve 14 X 23 X 7		2	
5	E 692 107 383 01	oil pipe short		1	
6	E 692 107 384 01	oil pipe short		1	
7	-	threaded joint L-SV 15		4	
8	E 692 107 365 00	seat		8	
9	692 107 385 01	oil pipe long		1	
10	692 107 386 01	oil pipe long		1	
11	E 692 107 363 00	clamp		2	
12	756 504 721 00	cover plate door		1	
13	756 504 723 00	cover plate luggage compartment		1	
14	N 014 726 1	pan-head screw M 8 X 30		2	
15	900 027 015 02	lock ring		6	
16	999 093 010 02	hexagon-head bolt M 8 X 20		4	
17	900 076 013 02	hexagon nut M 8		4	
		- -- E N D -- -			

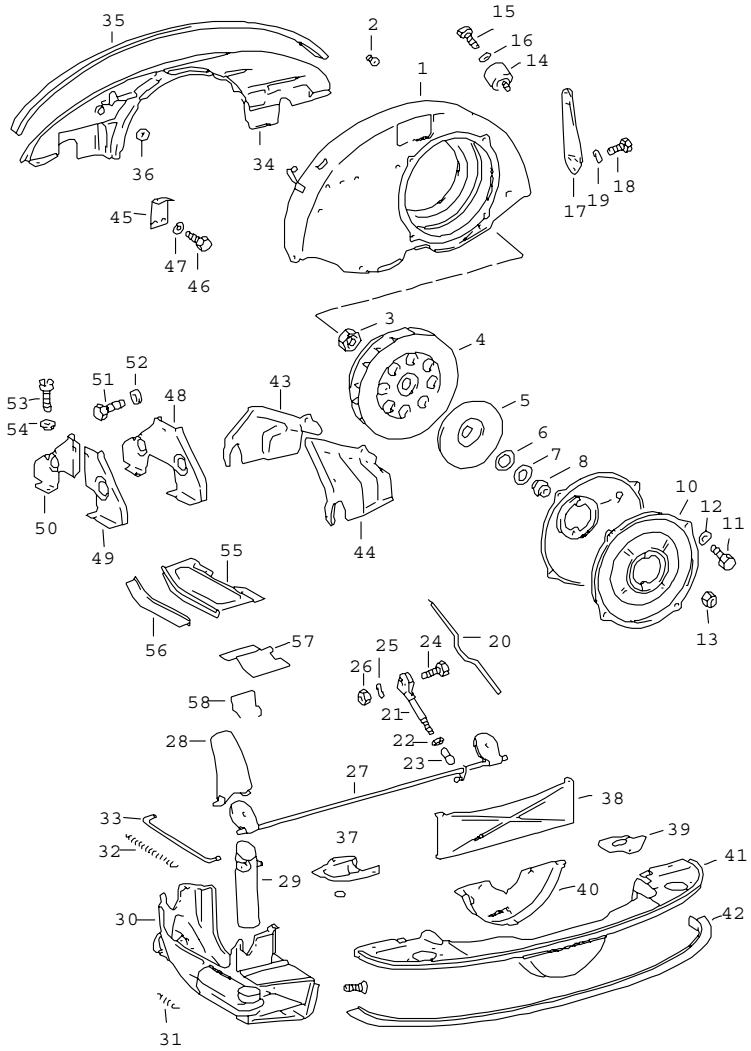

Pos	Part Number	Name	Remarks	Qty	Model
		air cooling heating old version			356 B/C
1	616 106 013 12	air guide housing upper part		1	356 B-T5 356 B-T6: 1600
(1)	616 106 013 12	air guide housing upper part		1	356 B-T6: 1600 S/S90 356 C:1600 C 1600 SC
-	546 72 203	decal label valve clearance		1	1600 /S
-	PCG 701 015 00	decal label valve clearance		1	1600 S/S90
2	E 539 06 116	plug		2	
3	616 106 181 00	nut for impeller		1	
4	E 616 106 011 00	impeller		1	
5	546 06 204	cover disc		1	
6	546 06 202	washer		X	
7	546 06 203	drive plate		2	
8	E 539 06 201	hub		1	
9	E 539 06 102	flange		1	
-	616 106 125 00	spacer ring		1	
10	616 106 105 01	cover		1	
11	900 075 010 02	hexagon-head bolt M 6 X 12		10	
12	900 028 008 01	spring washer B 6		6	
13	900 076 010 02	hexagon nut M 6		2	
14	E 546 06 590	thermostat		1	
15	900 075 078 02	hexagon-head bolt M 8 X 15		1	
16	900 028 010 01	spring washer B 8		1	

Pos	Part Number	Name	Remarks	Qty	Model
17	616 108 756 00	supporting bow	/R	1	356 B-T6
18	N 010 208 5	hexagon-head bolt M 6 X 8		3	356 B-T6 356 C
19	900 028 008 01	spring washer B 6		3	356 B-T6 356 C
20	546 06 591	connecting rod upper		1	
21	546 06 069	connecting rod lower		1	
22	900 076 006 02	hexagon nut M 5		1	
23	N 015 521 3	ball socket		1	
24	E 900 074 012 02	hexagon-head bolt M 6 X 20		1	356 B-T5
(24)	N 010 208 5	hexagon-head bolt M 6 X 8		1	356 B-T6 356 C
25	900 028 008 01	spring washer B 6		1	
26	900 076 010 02	hexagon nut M 6		1	
27	546 06 065	flap		1	
28	546 06 062	connection piece		2	
29	546 06 063	ventilation tube	/L	1	
(29)	546 06 064	ventilation tube	/R	1	
30	546 06 563	lower part		1	356 B-T5: 1600 /S
(30)	E 616 106 041 00	lower part		1	356 B-T5: 1600 S90
(30)	616 106 042 00	air duct		1	356 B-T5: 1600 S90
(30)	616 106 042 00	lower part		1	356 B-T5: 1600 S90
31	539 06 541	spring for heating flaps		2	
32	E 539 06 644	tension spring		2	1600 /S
33	E 539 06 572	connecting rod		2	1600 /S

Pos	Part Number	Name	Remarks	Qty	Model
-	E 616 106 662 00	connecting rod for heating flaps		2	356 B-T5: 1600 S90 356 B-T6: 1600 S/S90
-	E 616 106 661 00	connecting rod for heating flaps		2	356 B-T5: 1600 S90 356 B-T6: 1600 S/S90
-	E 616 106 631 00	tension spring		2	356 B-T5: 1600 S90 356 B-T6: 1600 S/S90
34	369 06 119	cover plate engine		1	
35	369 06 139	tread 830 MM		1	
36	539 06 605	rubber sleeve		1	
37	A 616 106 831 00	cover plate		1	
37	616 106 831 00	cover plate ZUR fuel pump		1	
38	539 06 526	cover plate engine		1	
39	539 06 645	cover plate		1	
40	E 616 106 083 00	cover plate M >> 601 994 M >> 85 940 M >> 800 150		1	
40	E 616 106 083 00	cover plate M 601 995 >> M 85 941 >> M 800 151 >>		1	
41	E PCG 106 562 00	cover plate engine it is necessary to rework		1	
42	369 06 139	rubber moulding		1	
43	539 06 637	cover plate upper	/V/L	1	
(43)	539 06 638	cover plate upper	/V/R	1	
44	539 06 639	cover plate upper	/H/L	1	

Pos	Part Number	Name	Remarks	Qty	Model
(44)	539 06 640	cover plate upper	/H/R	1	
45	539 06 646	support for cover plate		1	
46	N 010 210 13	hexagon-head bolt M 6 X 10		2	
47	900 028 008 01	spring washer B 6		2	
48	539 06 547	cover plate lateral		2	356 B-T5: 1600 S
49	539 06 555	cover plate lateral NR.1		2	356 B-T5: 1600 S90 356 B-T6 1600 S/S90
50	PCG 106 901 00	cover plate lateral NR.2		2	356 B-T5: 1600 S90 356 B-T6: 1600 S/S90
-	N 011 524 7	washer A 6,4		37	
-	N 010 210 13	hexagon-head bolt M 6 X 10		4	
51	N 010 208 5	hexagon-head bolt M 6 X 8		2	
52	N 011 524 7	washer 6,4		2	
53	900 014 020 02	pan-head screw M 6 X 12		25	
54	999 025 108 02	washer 6,4 X 14 X 1,6		4	
55	369 06 140	cover plate lateral	/L	1	
(55)	E 369 06 141	cover plate lateral	/R	1	
56	369 06 139	tread		2	
56	369 06 139	rubber moulding		1	
57	506 06 105	baffle plate	/L	1	
(57)	E 506 06 106	baffle plate	/R	1	
58	506 06 108	clamp		2	

- -- E N D -- -

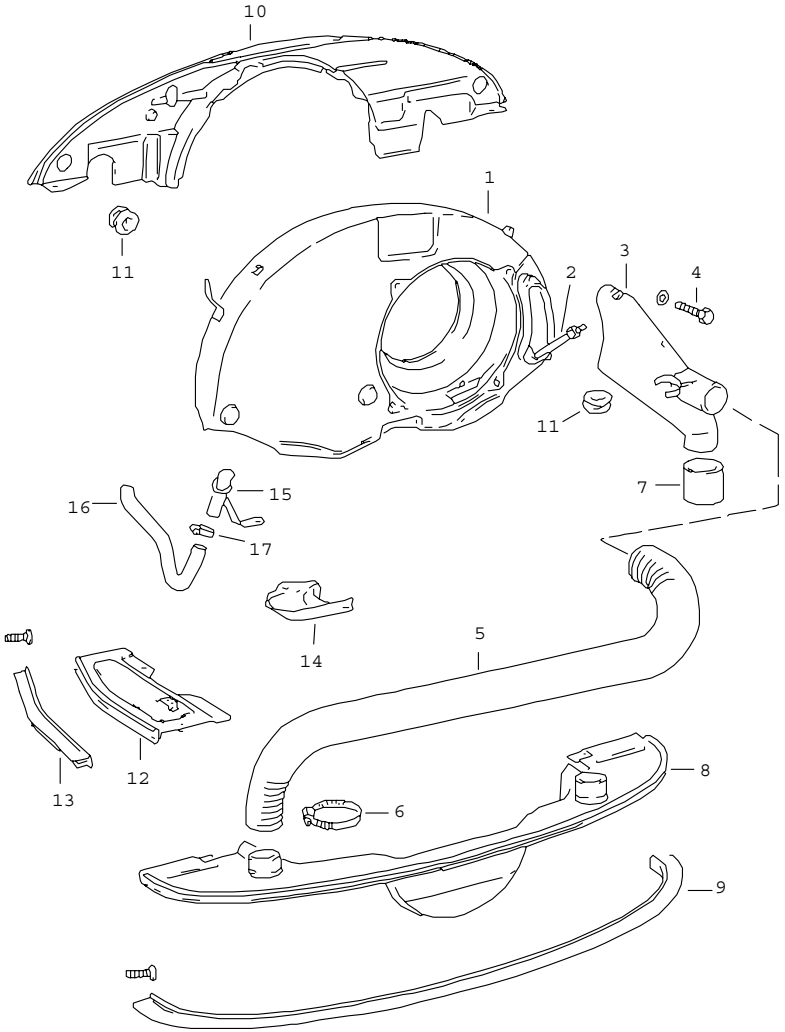

Pos	Part Number	Name	Remarks	Qty	Model
		air cooling heating new design			356 B/C
		parts not listed see group 1/05/00			
1	616 106 013 13	suction housing		1	
2	616 211 270 00	stud		1	
3	616 211 029 02	adapter		1	
(3)	616 211 029 02	intake manifold		1	
4	900 074 015 02	hexagon-head bolt M 6 X 30		1	
5	616 211 295 00	heater hose		1	
6	999 512 124 02	hose clamp		2	
7	E 616 211 296 00	connecting hose		1	
8	E 616 106 085 01	cover plate engine	/H	1	
9	616 106 896 00	rubber moulding		1	
10	E 616 106 082 00	cover plate engine	/V	1	
11	E 999 702 042 50	grommet		3	
12	369 06 140	cover plate lateral	/L	1	
(12)	E 369 06 141	cover plate lateral	/R	1	
13	616 106 897 00	rubber moulding		2	
14	616 106 831 00	cover plate for fuel pump		1	
15	616 106 078 03	intake manifold for carburetor preheating		2	1600 S90
(15)	616 106 078 03	adapter for carburetor preheating		2	1600 /S
16	616 107 791 00	breather hose		2	

Pos	Part Number	Name	Remarks	Qty	Model	Pos	Part Number	Name	Remarks	Qty	Model
17	N 024 115 1	hose clamp		X							
-	546 72 203	decal label valve clearance - BIRAL - cylinder		1	1600 SC						
		- -- E N D -- -									

Model	Year	MG	SG	Illustration	Restrictions	Update	12:59	27.10.2005	PORSCHE PET PORSCHE
356	65	1	05	105-10		194			

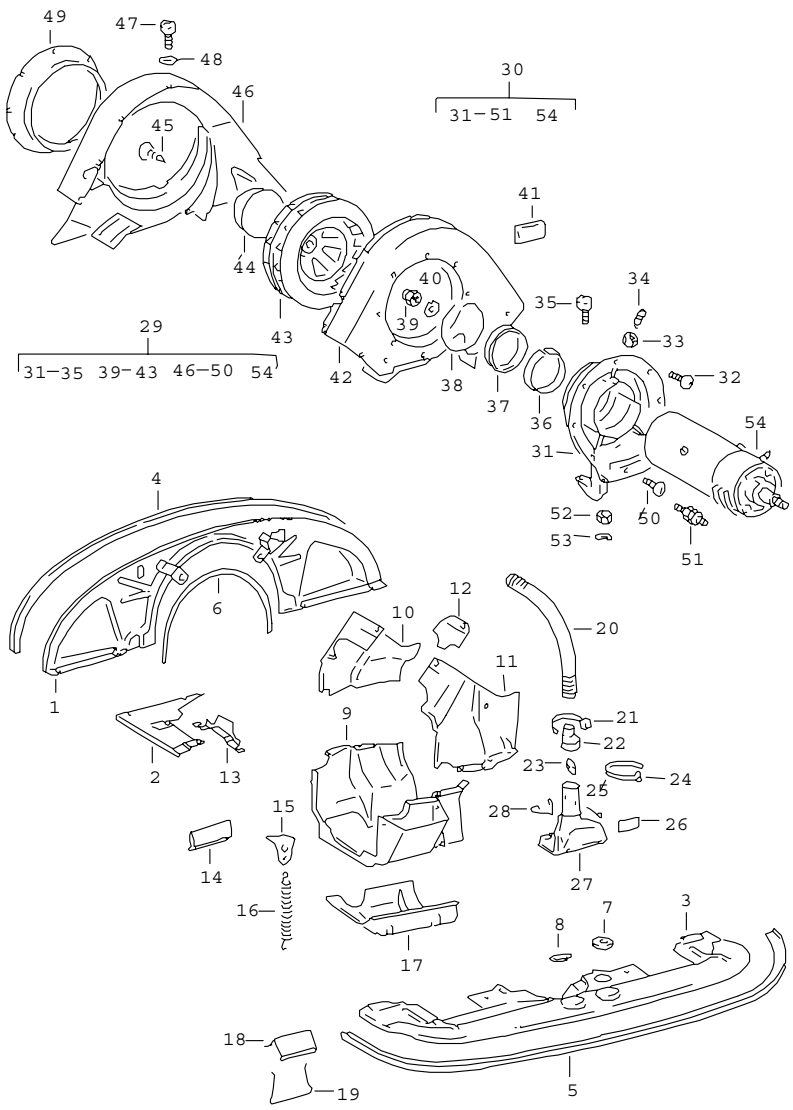

Pos	Part Number	Name	Remarks	Qty	Model
		air cooling			CARRERA 587/1/2 692/3/3A
1	E 692 106 081 02	engine cover	/V	1	587/1/2
(1)	692 106 081 01	engine cover	/V	1	692/3/3A
2	E 587 106 081 00	engine cover	/L	1	587/1/2
(2)	E 587 106 082 00	engine cover	/R	1	587/1/2
2	E 692 106 091 00	engine cover	/L	1	692/3/3A
(2)	E 692 106 082 01	engine cover	/R	1	692/3/3A
3	E 587 106 851 00	engine cover	/H	1	587/1/2
(3)	E 692 106 851 01	engine cover	/H	1	692/3/3A
4	E 547 06 306	sealing rubber		1	
5	E 547 06 308	sealing rubber 1925 MM		1	
6	E 547 06 325 0	sealing rubber I		1	587/1/2
(6)	E 547 06 100 1	sealing rubber		1	692/3/3A
7	E 999 702 033 50	rubber sleeve		1	
8	539 09 201	rubber cap		2	
9	E 587 106 041 00	lower part air duct	/L	1	587/1/2
(9)	E 587 106 042 00	lower part air duct	/R	1	587/1/2
9	E 692 106 041 01	lower part air duct	/L	1	692/3/3A
(9)	E 692 106 042 01	lower part air duct	/R	1	692/3/3A
10	E 587 106 033 00	air duct upper	/V/L	1	587/1
(10)	E 587 106 034 00	air duct upper	/V/R	1 1	587/1
10	E 587 106 033 01	air duct upper	/V/L	1	587/2
(10)	E 587 106 034 01	air duct upper	/V/R	1	587/2

Pos	Part Number	Name	Remarks	Qty	Model
10	E 692 106 037 03	air duct upper	/V/L	1	692/3
(10)	E 692 106 037 00	air duct upper	/V/L	1	692/3A
(10)	E 692 106 036 02	air duct upper	/V/R	1	692/3
(10)	E 692 106 036 01	air duct upper	/V/R	1	692/3A
11	E 587 106 035 00	air duct upper	/H/L	1	587/1
(11)	E 587 106 036 00	air duct upper	/H/R	1	587/1
11	E 587 106 035 01	air duct upper	/H/L	1	587/2
(11)	E 587 106 036 01	air duct upper	/H/R	1	587/2
11	E 692 106 035 03	air duct upper	/H/L	1	692/3
(11)	E 692 106 035 01	air duct upper	/H/L	1	692/3A
(11)	E 692 106 038 02	air duct upper	/H/R	1	692/3
(11)	E 692 106 038 00	air duct upper	/H/R	1	692/3A
12	E 587 106 323 00	cover plate	/L	1	587/1/2
(12)	E 587 106 324 00	cover plate	/R	1	587/1/2
12	E 692 106 345 01	cover plate	/L	1	692/3/3A
(12)	E 692 106 346 01	cover plate	/R	1	692/3/3A
13	E 587 106 321 00	cover plate intake manifold		2	587/1/2
(13)	547 06 504 1	cover plate intake manifold		2	692/3/3A
14	E 587 106 438 00	baffle plate upper		2	587/1/2
(14)	E 692 106 438 00	baffle plate upper		2	692/3/3A
15	644 611 151 00	support		4	692/3/3A
16	999 522 001 00	tension spring		4	692/3/3A
17	E 692 106 043 01	cover for lower part	/L	2	692/3/3A
(17)	E 692 106 044 01	cover for lower part	/R	1	692/3/3A
18	E 587 106 439 00	baffle plate lower		2	587/1/2
(18)	E 692 106 439 00	baffle plate lower		2	692/3/3A
19	E 547 06 518	spring clip		2	
20	E 692 106 921 01	hose		2	
21	E 999 512 020 02	clip		2	
-	E 547 06 306	gasket 1050 MM		1	692/3/3A
-	E 547 06 308	gasket 1925 MM		1	692/3/3A
-	E 547 06 325 0	sealing rubber I		1	692/3/3A
-	E 547 06 325 1	sealing rubber II		1	692/3/3A
-	E 547 06 325 2	sealing rubber III		1	692/3/3A
22	E 692 106 880 00	reducing socket		2	
23	E 692 106 873 01	flap		2	
24	E 999 512 012 02	hose clamp		2	
25	E 900 021 020 00	cotter pin 3 X 45		2	
-	900 075 010 02	hexagon-head bolt M 6 X 12		36	587/1/2
-	900 014 020 02	pan-head screw M 6 X 12		4	587/1/2
-	N 010 215 13	hexagon-head bolt M 6 X 15		10	587/1/2
-	900 076 010 02	hexagon nut M 6		10	587/1/2

Pos	Part Number	Name	Remarks	Qty	Model
-	N 011 524 7	washer 6,4		18	587/1/2
-	E 900 025 006 02	washer 7,4		14	587/1/2
26	E 000 006 501 00	decal label "ZU - AUF"		2	
-	900 075 010 02	hexagon-head bolt M 6 X 12		14	692/3/3A
-	E 900 025 006 02	washer 7,4		14	692/3/3A
27	E 692 106 083 00	connection piece complete	/L	1	587/1/2
(27)	E 692 106 084 00	connection piece complete	/R	1	587/1/2
27	E 692 106 087 00	connection piece complete	/L	1	692/3/3A
(27)	E 692 106 088 00	connection piece complete	/R	1	692/3/3A
28	E 692 106 875 00	spring clip		1	
-	N 011 524 7	washer 6,4		29	692/3/3A
29	587 106 901 00	air guide housing with generator complete M>>P97262		1	587/1
-	E 587 106 901 02	air guide housing with generator complete M P97 263 >> for generator (450 W)		1	587/1/2
-	587 106 901 01	air guide housing with generator complete		1	587/2
(30)	E 692 106 007 00	air guide housing with generator complete		1	692/3/3A

Pos	Part Number	Name	Remarks	Qty	Model
31	692 101 211 00	bracket M>>P97262		1	587/1
(31)	E 587 101 211 00	bracket M P97 263 >> for generator 450 W		1	587/1
(31)	E 547 01 109	bracket		1	587/2 692/3/3A
32	E 900 016 012 02	half-round screw M 6 X 15		7	
33	900 158 003 02	hexagon nut M 10		1	587/1/2
34	E 999 502 122 02	threaded pin		1	587/1/2
35	E 999 119 005 02	pan-head screw		1	587/1/2
36	E 547 01 111	cone ring		1	587/2 692/3/3A
37	E 547 01 110	retainer		1	587/2 692/3/3A
38	E 547 01 120	circlip		4	587/2 692/3/3A
39	E 900 096 002 02	cap nut M 14 X 1,5		1	587/1
(39)	E 547 06 210	hexagon nut		1	587/2 692/3/3A
40	E 900 030 002 01	tab washer 15		1	587/1
-	900 118 006 00	woodruff key 4 X 6,5		1	587/1/2
(40)	E 900 030 001 00	tab washer 13		1	587/2
(40)	E 900 030 001 00	tab washer 13		1	692/3/3A
41	E 547 006 501 00	decal label valve clearance		1	
42	E 692 106 015 10	fan housing left complete	/H	1	
43	E 692 106 010 00	impeller complete		1	587/1

Pos	Part Number	Name	Remarks	Qty	Model	Pos	Part Number	Name	Remarks	Qty	Model
(43)	E 547 06 021	impeller complete		1	587/2 692/3/3A						
44	E 547 06 209	protective cap		1	587/2 692/3/3A						
45	E 900 019 011 02	rais. counters. h. tap. s. M 6 X 30		1	587/2 692/3/3A						
46	E 692 106 016 10	fan housing right complete	/V	1							
47	E 900 015 013 02	oval-head screw M 6 X 10		X							
48	900 028 008 01	spring washer B 6		X							
49	E 547 06 012	insert ring		1							
50	E 900 016 013 02	half-round screw M 6 X 28		1							
51	547 08 103	retaining pivot		X	587/2 692/3/3A						
52	502 08 310	hexagon nut		4							
-	N 010 210 13	hexagon-head bolt M 6 X 10		5	692/3/3A						
-	E 900 014 007 02	pan-head screw M 6 X 10		21	692/3/3A						
-	N 010 215 13	hexagon-head bolt M 6 X 15		4	692/3/3A						
-	900 076 010 02	hexagon nut M 6		4	692/3/3A						
53	900 028 010 01	spring washer B 8		4							
54	-	see group 9/01/03									
		- -- E N D -- -									

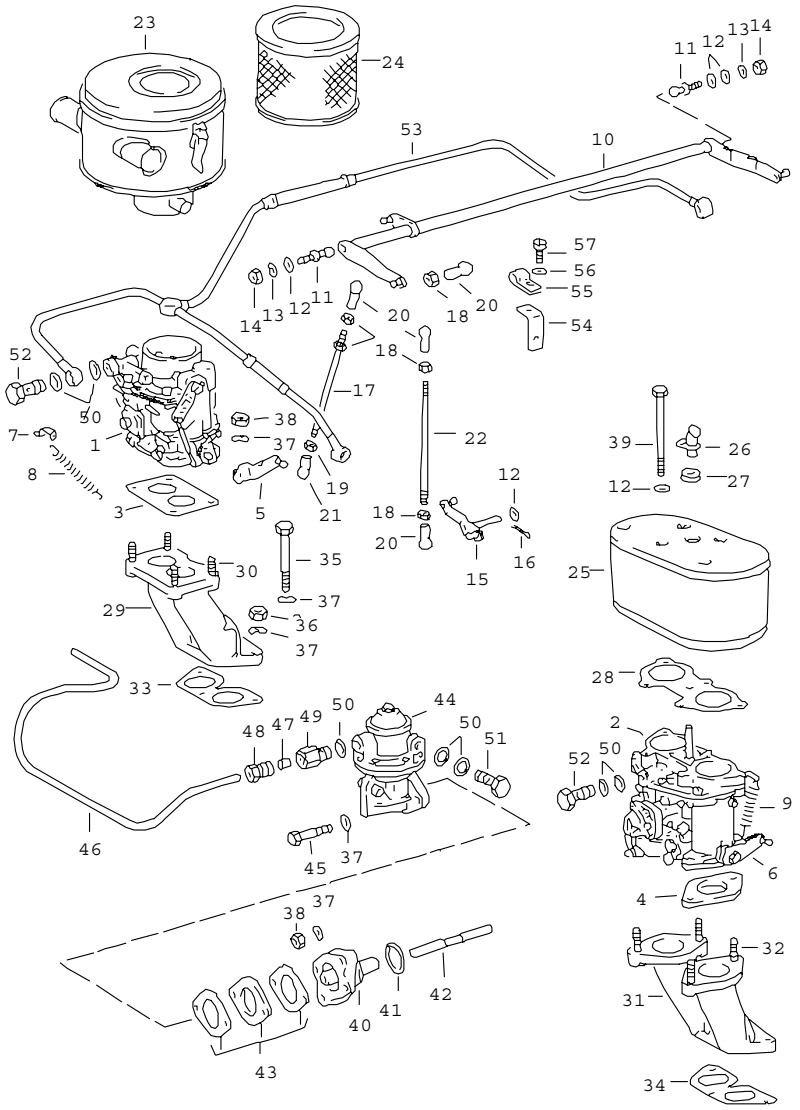

Pos	Part Number	Name	Remarks	Qty	Model
		carburetor and fuel supply line			356 B/C
		valid up to:			
		M >> 611 000 M >> 706 000 M >> 807 000			1600 1600 S 1600 S90
1	616 08 141	carburetor 32 NDIX (PO 3 L)		1	1600
(1)	616 08 141 1	carburetor 32 NDIX (PO 3 R)		1	1600
(1)	616 08 142	carburetor 32 NDIX (PO 2 L)		1	1600 S
(1)	616 08 142 1	carburetor 32 NDIX (PO 2 R)		1	1600 S
(1)	E 616 108 108 00	carburetor 32 NDIX	/L	1	1600 C
(1)	E 616 108 109 00	carburetor 32 NDIX	/R	1	1600 C
-	616 108 902 01	set of seals for 32 NDIX carburetor		2	
2	616 108 103 00	carburetor 40 PII - 4	/L	1	1600 S90
(2)	616 108 104 00	carburetor 40 PII - 4	/R	1	1600 S90
(2)	616 108 103 01	carburetor 40 PII - 4 M 812 402 >> not for (D)(S) M 821 111 >>	/L	1	1600 SC (D)(S)
(2)	616 108 104 01	carburetor 40 PII - 4 M 812 402 >> not for (D)(S) M 821 111 >>	/R	1	1600 SC (D)(S)
-	616 108 902 03	set of seals for 40 PII - 4 carburetor		2	

Pos	Part Number	Name	Remarks	Qty	Model
3	597 108 310 01	gasket		2	1600 /S/C
4	616 108 390 00	flange		4	1600 S90/SC
5	616 08 013	lever	/L	1	1600 /S/C
(5)	616 08 034	lever	/R	1	1600 /S/C
6	616 100 977 00	lever with support	/L	1	1600 S90/SC
(6)	E 616 100 978 00	lever with support	/R	1	1600 S90/SC
7	616 08 139	bracket		2	1600 /S/C
(7)	E 692 100 974 00	bracket		2	1600 S90/SC
8	616 08 119	tension spring		2	1600 /S/C
9	999 522 003 02	tension spring		2	1600 S90/SC
10	616 08 011	reverse lever		1	
11	999 167 012 02	ball pin		2	
12	N 011 524 7	washer 6,4		4	
13	900 028 008 01	spring washer B 6		2	
14	900 076 010 02	hexagon nut M 6		2	
15	616 108 071 00	reverse lever		1	
16	E 900 021 002 02	cotter pin 1,5 X 10		1	
17	616 08 012	push rod		2	
18	900 076 006 02	hexagon nut M 5		6	
19	900 076 029 02	hexagon nut M 5		2	
20	N 015 521 3	ball socket A 8		4	
21	900 169 010 02	ball socket A 8		2	
-	616 108 620 00	push rod complete		1	

Pos	Part Number	Name	Remarks	Qty	Model
22	616 108 620 00	push rod		1	
23	E 616 108 205 00	air cleaner		2	1600 /S/C
-	E 999 701 093 50	o-ring		1	1600 /S/C
24	616 08 811 1	filter element		2	1600 /S/C
-	E 616 108 911 00	rubber seal for filter element		2	1600 /S/C
25	616 108 203 01	air cleaner		2	1600 S90/SC
26	E 616 107 075 01	connecting tube		1	1600 S90/SC
27	999 702 101 50	rubber sleeve		1	1600 S90/SC
-	E 616 108 222 00	flame protection insert		1	1600 C/SC
28	616 108 291 00	gasket		2	1600 S90/SC
29	616 08 035	intake manifold		2	1600 /S/C
30	900 061 006 01	stud		8	1600 /S/C
31	616 108 033 01	intake manifold		2	1600 S90/SC
32	E 900 061 028 01	stud		8	1600 S90/SC
33	502 08 110	gasket		2	1600 /S/C
34	616 108 905 00	gasket		2	1600 S90/SC
35	900 074 044 02	hexagon-head bolt M 8 X 70		2	
36	900 076 013 02	hexagon nut		4	
37	900 028 010 01	spring washer		18	
38	502 08 310	hexagon nut		10	
39	N 010 354 1	hexagon-head bolt		10	1600 S90/SC
40	E 616 08 042 1	intermediate flange		1	
41	999 701 043 50	o-ring		1	
42	E 539 08 408	cam follower		1	
43	616 108 440 00	flange with gasket		1	
44	616 08 401	fuel pump		1	

Pos	Part Number	Name	Remarks	Qty	Model
45	900 075 099 02	hexagon-head bolt M 8 X 30		2	
46	616 108 559 00	control line		1	
47	539 08 201	nipple		1	
48	900 193 001 02	cap screw AL 8		1	
49	546 08 202	sleeve		1	
50	616 108 423 00	sealing ring		7	
51	616 108 432 00	banjo bolt		1	
52	616 100 867 00	banjo bolt		2	
53	616 108 059 00	control line		1	356 B-T5: 1600 /S
53	616 108 059 00	fuel line	/S/C 600	1	356 B-T6/C:1 1600 /S
(53)	616 108 055 03	control line		1	1600 S90/SC
54	616 108 570 00	engine carrier complete		1	
55	E 999 511 007 02	clip		1	
56	900 027 013 01	lock ring B 6		1	
57	900 075 010 02	hexagon-head bolt M 6 X 12		1	
		- -- E N D -- -			

Pos	Part Number	Name	Remarks	Qty	Model

Model	Year	MG	SG	Illustration	Restrictions	Update	12:59	27.10.2005	PORSCHE PET PORSCHE
356	65	1	07	107-03		194			

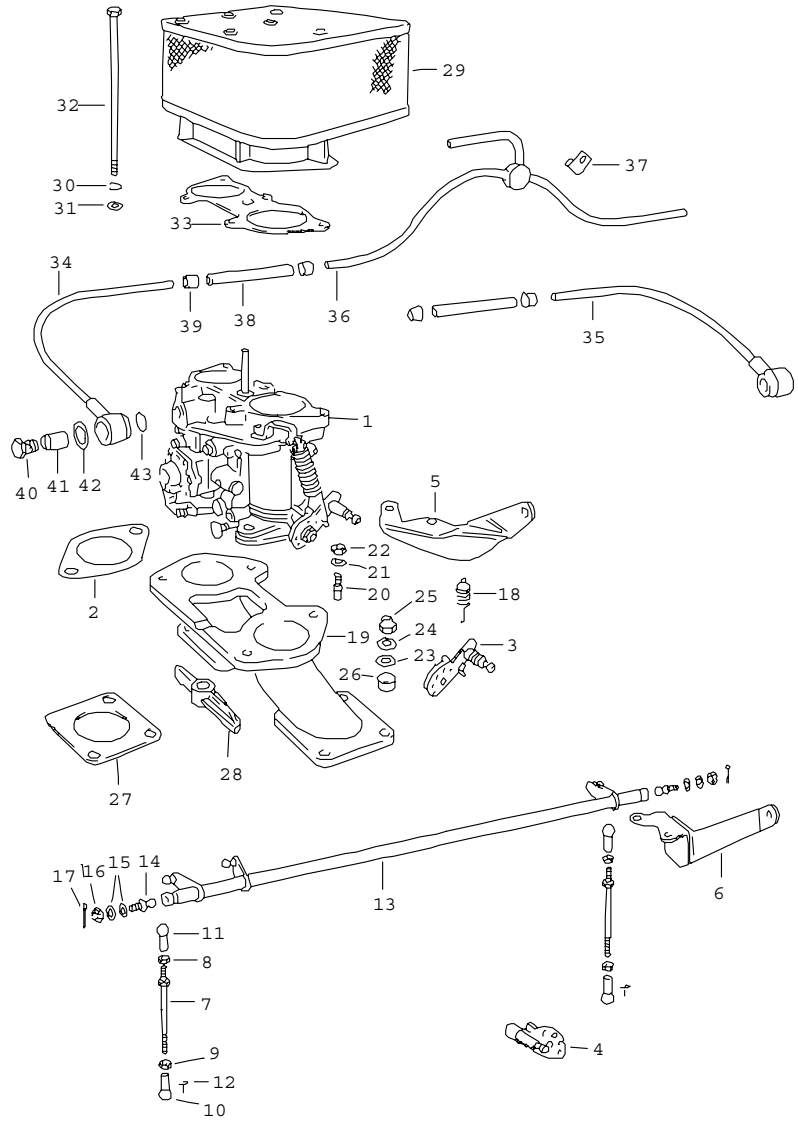

Pos	Part Number	Name	Remarks	Qty	Model
		carburetor and fuel supply line			CARRERA 587/1/2
-	E PCG 108 902 00	set of seals for carburetor		2	
1	E 587 108 101 00	carburetor 40 PII - 4	/L	1	587/1
(1)	E 587 108 102 00	carburetor 40 PII - 4	/R	1	587/1
-	-	set of seals ?FUER 40 PII - 4 carburetor		2	
(1)	547 108 107 01	carburetor 46 IDM/2	/L	1	587/2
(1)	547 108 108 01	carburetor 46 IDM/2	/R	1	587/2
2	616 108 901 02	gasket		4	587/1
(2)	E 547 08 326	gasket		4	587/2
3	E 587 108 015 00	lever with support	/L	1	587/1
(3)	E 587 108 017 00	lever with support	/L	1	587/2
4	E 587 108 016 00	lever with support	/R	1	587/1
(4)	E 587 108 018 00	lever with support 7452 A	/R	1	587/2
-	E 692 100 983 00	ball pin		2	587/1
-	E 616 100 993 00	lock ring		2	587/1
5	E 692 108 751 02	bearing	/L	1	587/1
(5)	E 587 108 753 00	bearing	/L	1	587/2
6	E 587 108 076 00	bearing	/R	1	587/1
(6)	E 587 108 078 00	bearing	/R	1	587/2

Pos	Part Number	Name	Remarks	Qty	Model
7	E 692 108 641 00	push rod		2	
8	900 076 006 02	hexagon nut M 5		4	
9	900 076 029 02	hexagon nut M 5		2	
10	900 169 008 02	ball socket B 8		2	
11	900 169 013 02	ball socket B 8		2	
12	900 169 014 02	securing clip S 8		4	
13	E 587 108 061 00	reverse lever complete		1	
14	999 167 012 02	ball pin		2	
15	N 011 524 7	washer 6,4		4	
16	900 079 012 02	castle nut M 6		2	
17	N 012 507 1	cotter pin 1,5 X 15		2	
18	999 522 003 02	tension spring		2	
19	E 587 108 031 00	intake manifold		2	587/1
(19)	E 547 108 036 00	intake manifold		2	587/2
20	E 900 080 003 01	stud 8 X 20		8	
21	900 028 010 01	spring washer B 8		8	
22	502 08 310	hexagon nut		8	
23	547 08 324	rubber ring		42	
24	E 547 08 325	washer		14	
25	E 900 801 001 02	hexagon nut		14	
26	E 547 08 323	sleeve		14	
27	E 692 108 903 00	gasket for intake manifold		4	
28	E 692 108 315 00	support		2	
29	E 587 108 021 00	air cleaner	/L/R	2	587/1
(29)	E 587 108 023 00	air cleaner	/L	1	587/2
(29)	E 587 108 024 00	air cleaner	/R	1	587/2
-	900 025 003 02	washer 5,3		8	587/2
-	N 010 207 6	hexagon-head bolt M 5 X 12		8	587/2
-	E 999 512 037 02	hose clamp SR 57 / 12		2	587/2
30	900 027 014 01	lock ring B 6		10	
31	N 011 524 7	washer 6,4		10	
32	E 900 074 027 02	hexagon-head bolt M 6 X 145		10	
33	616 108 291 00	gasket		2	
34	E 547 08 255	line	/L	1	587/1
(34)	E 692 108 057 00	line	/L	1	587/2
35	E 547 08 256	line	/R	1	587/1
(35)	E 692 108 057 00	line	/R	1	587/2
36	E 587 108 052 00	fuel line		1	587/1
(36)	E 587 108 052 01	fuel line		1	587/2
37	E 356 49 648	clip		1	
38	999 180 030 50	fuel hose A 6 X 80		2	587/1
(38)	999 180 030 50	fuel hose		2	587/2
39	901 108 219 00	hose piece		4	
40	E 692 100 979 00	banjo bolt		2	587/1
(40)	E 692 100 946 01	banjo bolt		2	587/2
41	E 616 08 719	strainer		2	587/1
(41)	E 901 100 808 00	strainer		2	587/2
42	E 692 100 981 00	sealing ring		2	587/1
(42)	901 100 916 00	sealing ring		2	587/2

Pos	Part Number	Name	Remarks	Qty	Model	Pos	Part Number	Name	Remarks	Qty	Model
43	616 108 423 00	sealing ring		2	587/1						
(43)	901 100 915 00	sealing ring		2	587/2						
-	E 587 108 081 00	cover plate	/L	1							
-	E 587 108 082 00	cover plate	/R	1							
-	E 900 074 107 02	hexagon-head bolt M 6 X 120		2							
-	900 076 010 02	hexagon nut M 6		2							
-	N 011 524 7	washer 6,4		2							
		- -- E N D -- -									

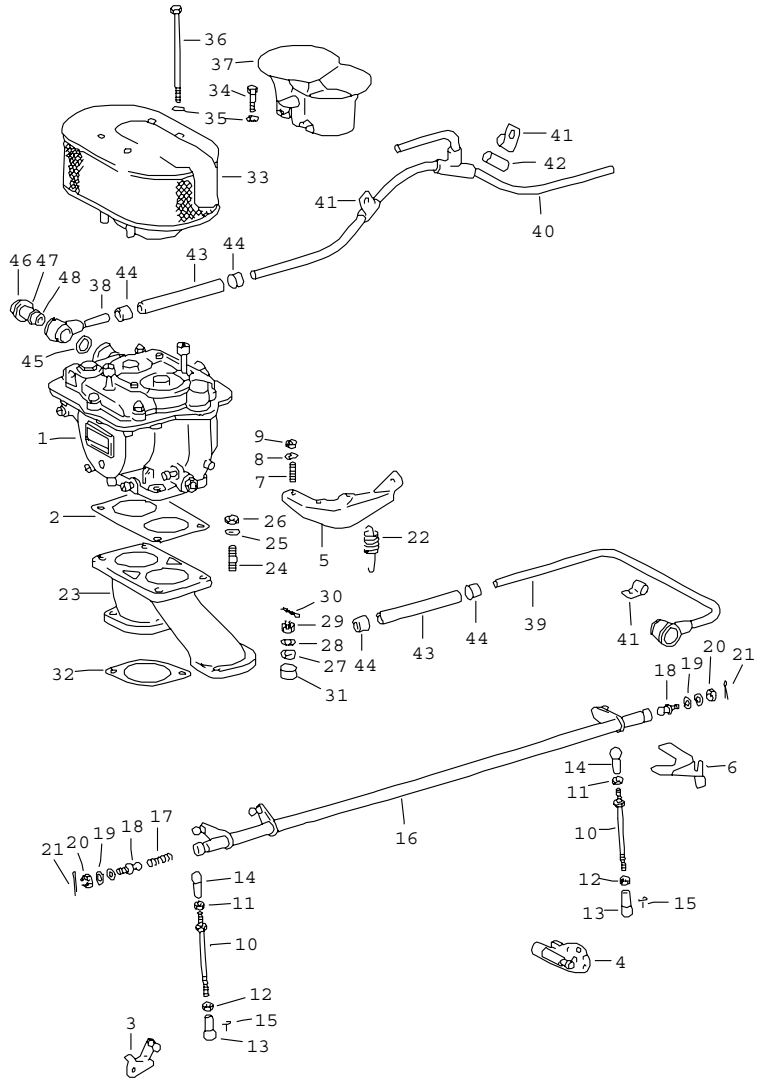

Pos	Part Number	Name	Remarks	Qty	Model
		carburetor and fuel supply line			CARRERA 692/3/3A
1	E 692 108 106 00	carburetor	/L	1	692/3
(1)	E 692 108 105 00	carburetor	/R	1	692/3
(1)	E 692 108 108 00	carburetor	/L	1	692/3A
(1)	E 692 108 107 00	carburetor	/R	1	692/3A
2	E 692 108 901 00	gasket		2	692/3
(2)	E 692 108 902 00	gasket		2	692/3A
3	E 692 108 017 00	lever	/L	1	692/3
(3)	E 692 100 977 00	lever	/L	1	692/3A
4	E 692 108 018 00	lever	/R	1	692/3
(4)	E 692 100 978 00	lever	/R	1	692/3A
-	E 900 167 001 00	ball pin A 8		2	692/3A
-	N 012 005 3	lock ring B 5		2	692/3A
5	E 692 108 755 00	bearing	/L	1	692/3
(5)	E 692 108 751 02	bearing	/L	1	692/3A
6	E 692 108 756 00	bearing	/R	1	692/3
(6)	692 108 752 02	bearing	/R	1	692/3A
7	900 080 006 02	stud M 5 X 15		6	
8	N 012 005 3	lock ring B 5		6	
9	N 011 005 14	hexagon nut M 5		6	
10	E 692 108 641 00	push rod		2	
11	N 011 005 14	hexagon nut		4	
12	900 076 029 02	hexagon nut M 5 left thread		2	692/3
(12)	900 076 029 02	hexagon nut M 5 left thread		2	692/3A

Pos	Part Number	Name	Remarks	Qty	Model
13	900 169 008 02	ball socket B 8 left thread		2	
14	900 169 013 02	ball socket B 8		2	
15	900 169 014 02	securing clip		4	
16	E 692 108 061 02	reverse lever complete		1	
17	E 999 521 008 00	compression spring		1	
18	999 167 012 02	ball pin		2	
19	N 011 524 7	washer 6,4		4	692/3
(19)	N 011 524 7	washer 6,4		4	692/3A
20	900 079 012 02	castle nut M 6		2	
21	N 012 507 1	cotter pin 1,5 X 15		2	
22	E 999 522 002 02	tension spring		2	692/3
(22)	999 522 003 02	tension spring		2	692/3A
23	E 692 108 301 00	intake manifold		2	692/3
(23)	E 692 108 031 00	intake manifold		2	692/3A
24	E 900 061 022 01	stud 8 X 12		8	692/3
(24)	999 062 006 02	stud 8 X 20		8	692/3A
25	E 900 028 004 01	spring washer A 8		8	
26	502 08 310	hexagon nut		8	
27	547 08 324	rubber ring		24	
28	E 547 08 325	washer		8	
29	E 000 95 507	castle nut		8	
30	E 900 021 009 00	cotter pin 2 X 18		8	
31	E 547 08 323	sleeve		8	
32	E 547 08 313	gasket for intake manifold		4	
33	E 692 108 201 00	air cleaner		2	692/3
(33)	E 692 108 203 00	air cleaner together with exhaust silencer 692.111.013.00 or sport version I 692.111.017.00 /- COUPE -		2	692/3A
34	900 075 010 02	hexagon-head bolt M 6 X 12		10	692/3A
-	900 025 003 02	washer 5,3		8	692/3
35	N 012 005 3	lock ring B 5		8	692/3
(35)	900 027 013 01	lock ring B 6		20	692/3A
-	N 011 524 7	washer 6,4		10	692/3A
36	E 900 074 007 00	hexagon-head bolt M 5 X 103		8	692/3
(36)	E 900 074 027 02	hexagon-head bolt M 6 X145		10	692/3A
37	E 547 08 315 1	intake trumpet together with exhaust silencer sport version II 692.111.014.00 or exhaust system for CABRIOLET/HARDTOP ROADSTER and ABARTH GT		2	692/3A
-	616 108 291 00	gasket		2	692/3A
38	E 692 108 057 00	line	/L	1	692/3
(38)	E 547 08 255	line	/L	1	692/3A
39	E 692 108 058 00	line	/R	1	692/3

Pos	Part Number	Name	Remarks	Qty	Model
(39)	E 547 08 256	line	/R	1	692/3A
40	E 692 108 055 01	fuel line COUPE		1	692/3
(40)	E 692 108 055 00	fuel line CABRIOLET/HARDTOP ROADSTER		1	692/3
(40)	E 547 08 230	fuel line COUPE		1	692/3A
(40)	E 547 08 238	fuel line CABRIOLET/HARDTOP ROADSTER		1	692/3A
41	E 356 49 648	clip		3	
42	356 49 664	boot		2	
43	999 180 030 50	fuel hose		2	692/3
(43)	547 08 239	hose		2	692/3A
44	901 108 219 00	cap		4	
-	E 692 108 096 00	protection cap for intake trumpet		2	692/3A
45	901 100 916 00	sealing ring for filter 236		2	692/3
46	901 100 915 00	sealing ring for filter 235		2	692/3
47	E 901 100 808 00	strainer 241 A		2	692/3
48	E 692 100 946 00	fastening screw 1682 banjo bolt		2	692/3
		- -- E N D -- -			

Pos	Part Number	Name	Remarks	Qty	Model

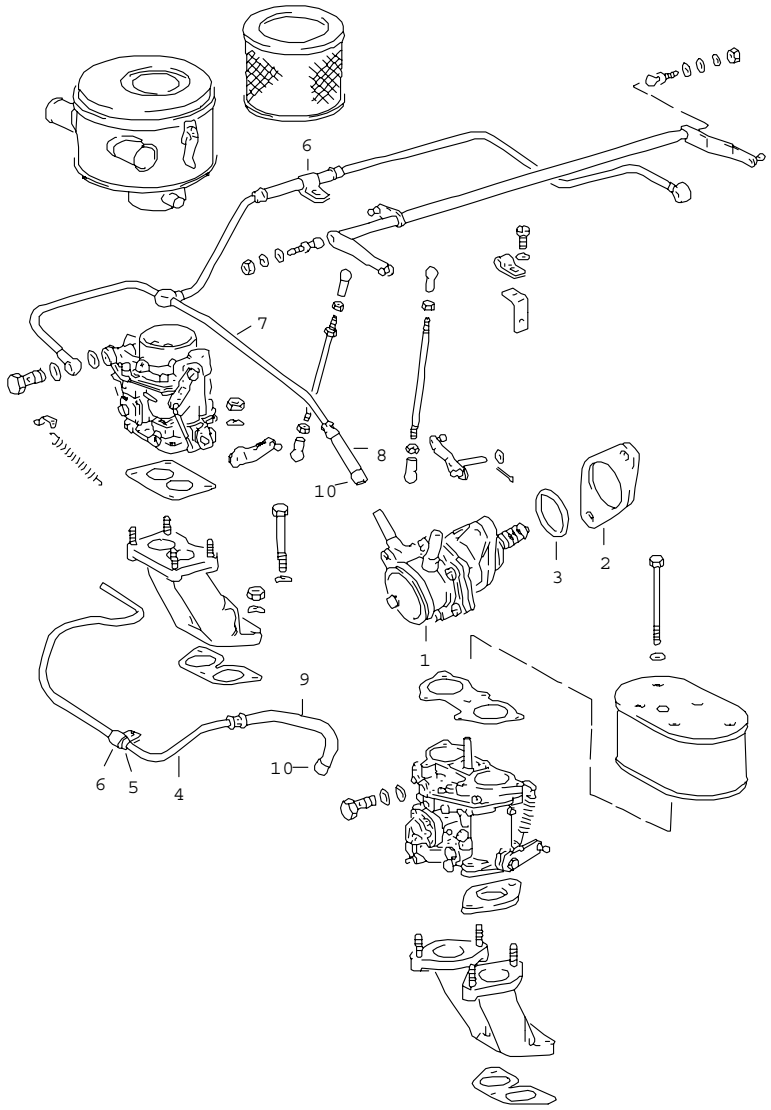

Pos	Part Number	Name	Remarks	Qty	Model
		fuel pump and fuel line			356 B/C
		valid for			
		M 611 001 >> M 706 001 >> M 807 001 >>			1600 1600 S 1600 S90
		see group 1/07/00			
1	PCG 108 401 00	fuel pump PE 15 057		1	
2	616 108 441 00	flange		1	
3	999 701 043 50	o-ring		1	
4	616 108 559 00	fuel line		1	
5	616 108 591 00	boot		1	
6	E 999 511 007 02	clip		2	
7	616 108 059 00	control line		1	1600 /S/C
(7)	616 108 055 03	control line		1	1600 S90/SC
8	999 180 030 50	fuel hose A 6 X 65 SN 710		1	
9	999 180 030 50	fuel hose A 6 X 155 SN 710		1	
10	901 108 219 00	cap		4	
		- -- E N D -- -			

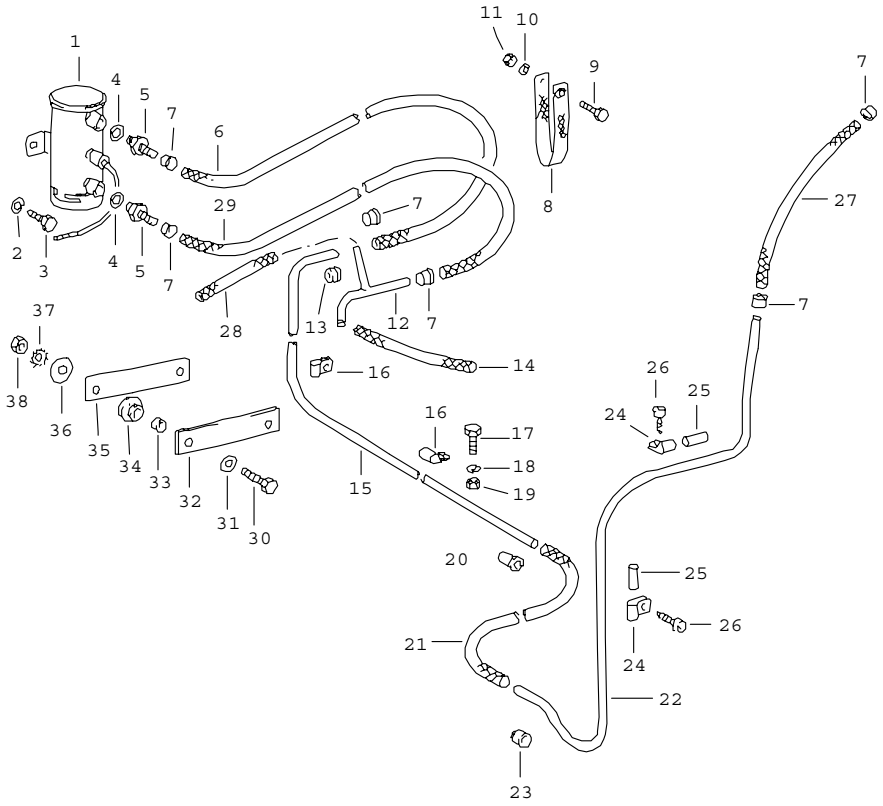

Pos	Part Number	Name	Remarks	Qty	Model
		fuel pump and fuel line			CARRERA 692/3/3A 587/1/2
1	E 692 608 102 00	fuel pump - BENDIX -		1	
(1)	E 692 608 102 00	fuel pump for - ABARTH - body		2	692/3/3A
-	E 692 108 580 00	distributing piece for - ABARTH - body		2	692/3/3A
-	999 136 005 01	adapter		1	692/3/3A
2	900 028 008 01	spring washer B 6		2	
3	900 075 010 02	hexagon-head bolt M 6X12		2	
4	900 123 005 20	sealing ring A 12X16		2	692/3/3A
(4)	900 123 005 20	sealing ring A 12X16		2	587/1/2
5	999 136 005 01	union P 922.107		2	
6	999 180 030 50	fuel hose 690 MM		2	692/3/3A
(6)	999 180 030 50	fuel hose		1	587/1/2
7	901 108 219 00	cap		6	
8	999 706 009 80	suspension strap		1	
9	900 074 013 01	hexagon-head bolt M 6X22		1	692/3/3A
(9)	900 378 030 09	hexagon-head bolt M 6X20		1	587/1/2
10	900 028 008 01	spring washer B 6		1	
11	900 076 010 02	hexagon nut M 6		2	
(12)	E 547 08 243 1	fuel line		1	692/3/3A

Pos	Part Number	Name	Remarks	Qty	Model
12	E 644 201 111 00	fuel line with t-piece		1	587/1/2
13	539 06 605	grommet		2	
14	999 180 030 50	fuel hose 150 MM		1	692/3/3A
(14)	999 180 030 50	fuel hose 6X230 MM		1	587/1/2
15	E 616 108 531 00	fuel line 1700 MM fuel tank - engine		1	692/3/3A
(15)	616 108 531 01	fuel line 1700 MM fuel tank - engine		1	587/1/2
16	E 356 49 648	clamp		2	
17	900 075 003 01	hexagon-head bolt M 5X10		2	692/3/3A
(17)	N 010 210 13	hexagon-head bolt M 6X10		2	587/1/2
18	N 012 225 2	spring washer B 5		2	692/3/3A
(18)	900 028 008 01	spring washer B 6		2	587/1/2
19	900 076 010 02	hexagon nut M 5		2	692/3/3A
(19)	900 076 010 02	hexagon nut M 6		2	587/1/2
20	914 356 201 00	rubber sleeve		1	
21	999 180 030 50	fuel hose 6X750 MM		1	
22	E 547 08 248	fuel line	/H	1	
(22)	547 08 249	fuel line for cabriolet		1	
23	539 06 605	grommet		1	
24	E 900 172 001 00	clamp 12		2	
25	356 49 664	boot		2	
26	900 138 006 00	pan-head tapping screw B 3,9X13		2	
27	999 180 030 50	fuel hose 250 MM		1	692/3/3A
(27)	E 999 180 016 50	fuel hose 320 MM		1	587/1/2
28	999 180 030 50	fuel hose A 6X75 MM		1	587/1/2
29	999 180 030 50	fuel hose A 6X560 MM		1	587/1/2
30	900 378 030 09	hexagon-head bolt M 6X20		2	587/1/2
31	N 011 524 7	washer 6,4		2	587/1/2
32	E 587 608 591 00	rubber plate		1	587/1/2
33	E 587 608 513 00	bush		2	
34	E 587 608 593 00	rubber washer		2	587/1/2
35	E 587 608 511 00	plate		1	587/1/2
36	900 151 006 09	washer B 6,4		2	587/1/2
37	N 042 121 1	shake-proof washer J 6,4		2	587/1/2
38	900 076 010 02	hexagon nut M 6		2	

- -- E N D -- -

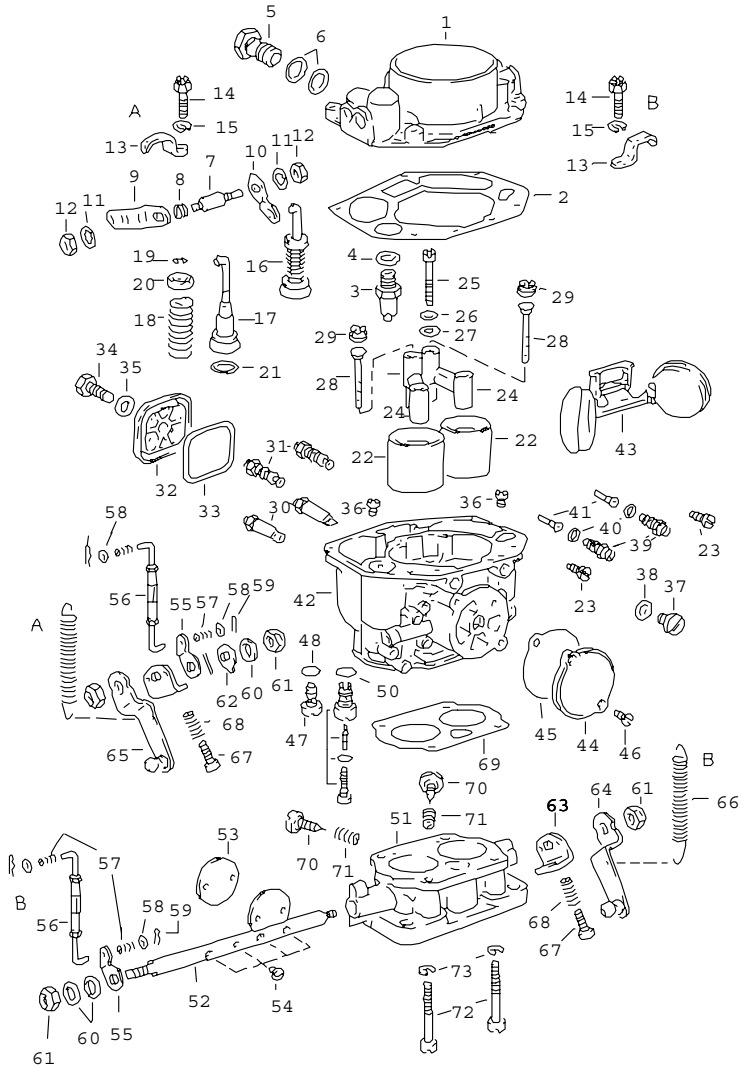

Pos	Part Number	Name	Remarks	Qty	Model
		single parts for carburetor PALLAS - ZENITH 32 NDIX			1600 /S/C
-	616 108 902 01	set of seals for carburetor		2	
1	616 100 863 00	cover		1	
2	616 100 864 00	gasket		1	
-	E 900 093 002 30	grooved nail		2	
3	616 100 974 00	carburettor needle valve 125		1	
4	616 100 866 00	sealing ring		1	
5	616 100 867 00	banjo bolt		1	
6	616 108 423 00	sealing ring		2	
7	616 100 869 00	shaft		1	
8	E 616 100 870 00	spring		1	
9	616 100 871 00	lever outer		1	
10	E 616 100 872 00	lever inner		1	
11	E 616 100 873 00	shake-proof washer J 6,4		2	
12	616 100 874 00	hexagon nut BM 6		2	
13	616 08 139	bracket		1	
14	616 100 877 00	fastening screw		5	
15	616 100 878 00	lock ring B 5		5	
16	616 100 850 00	piston complete		1	
17	616 100 850 00	piston		1	
18	616 100 850 00	piston		1	
19	616 100 850 00	piston		1	
20	616 100 850 00	piston		1	

Pos	Part Number	Name	Remarks	Qty	Model
21	616 100 850 00	piston		1	
22	E 616 100 824 00	funnel 24		2	1600
(22)	616 100 825 00	funnel 28		2	1600 S/C
23	616 100 826 00	screw		2	
24	616 100 827 00	mixing tube bracket with booster		2 2	
25	E 616 100 828 00	screw		1	
26	616 100 830 00	lock ring A 5		1	
27	900 025 003 02	washer		1	
28	E 616 100 831 00	mixing tube 1 S		2	
29	E 616 100 832 00	air correction jet 230		2	1600
(29)	E 616 100 833 00	air correction jet 220		2	1600 S
(29)	E 616 100 885 00	air correction jet 210		2	1600 C
30	E 616 100 834 00	main vent 115		2	1600
(30)	E 616 100 835 00	main vent 130		2	1600 S
31	616 100 836 00	idle jet 50		2	1600 /S
(31)	E 616 100 836 03	idle jet 55		2	1600 C
32	E 616 100 837 00	cover		1	
33	616 100 838 00	sealing ring		1	
34	616 100 839 00	hexagon-head bolt		1	
35	E 616 100 840 00	sealing ring		1	
36	616 100 841 00	idle jet 120		2	1600
(36)	E 616 100 842 00	idle jet 140		2	1600 S/C
37	616 100 843 00	screw plug		1	
38	616 100 844 01	sealing ring		1	
39	616 100 845 00	pump jet 50		2	1600
(39)	616 100 846 00	pump jet 40		2	1600 S/C
40	616 100 847 00	sealing ring		2	
41	E 616 100 848 00	injection pipe NR. 8 short		2	
42	E 616 100 822 00	housing		1	
43	616 100 823 00	float with articulated support		1	
44	E 616 100 860 00	cover		1	
45	616 100 862 00	gasket		2	
-	900 114 007 01	shake-proof washer V 5,3		2	
46	616 100 861 00	oval-head screw		1	
47	E 616 100 856 00	suction valve		1	
48	616 100 857 01	sealing ring aluminium		1	
49	E 616 100 858 00	pressure valve complete		1	
50	616 100 859 01	sealing ring aluminium		1	
51	E 616 100 801 00	throttle body without throttle shaft and accessories		1	
52	PCG 100 802 00	shaft		1	
53	616 100 803 00	flap		2	
54	E 616 100 804 00	oval-head screw		4	
55	616 100 808 00	lever		1	

Pos	Part Number	Name	Remarks	Qty	Model
56	616 100 809 00	connecting rod		1	
57	616 100 810 00	spring		2	
58	E 616 100 811 00	washer		2	
59	616 100 812 00	retaining spring		2	
60	E 616 100 816 00	washer		2	
61	616 100 817 00	hexagon nut		2	
62	E 616 100 815 00	washer		1	
63	616 100 805 00	support		1	
64	616 08 034	lever		1	
65	616 08 013	lever		1	
66	616 08 119	tension spring		1	
67	616 100 813 00	adjusting screw		1	
68	616 100 814 00	compression spring		1	
69	616 100 821 00	gasket		1	
70	616 100 818 00	idle speed adjusting screw		2	
71	616 100 814 00	compression spring		2	
72	E 616 100 819 00	pan-head screw		4	
73	616 100 820 00	lock ring		4	
		- A - valid for carburetor	/L		
		- B - valid for carburetor	/R		
		- -- E N D -- -			

Pos	Part Number	Name	Remarks	Qty	Model

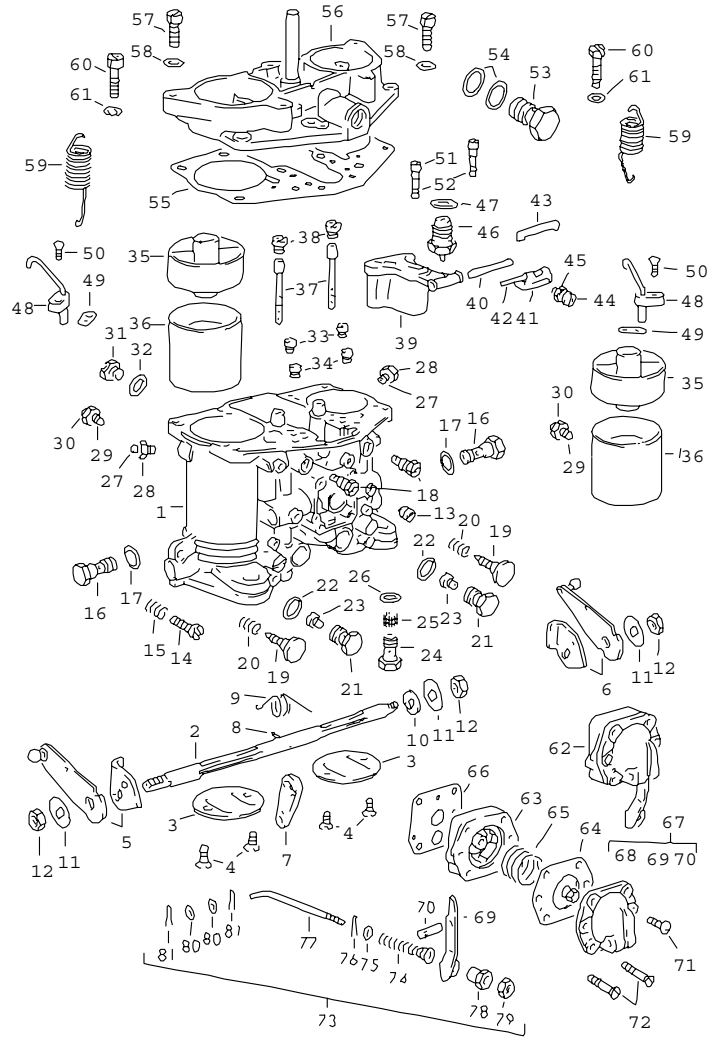

Pos	Part Number	Name	Remarks	Qty	Model
		single parts for carburetor SOLEX-40 PII-4/44 PII-4			1600 S90/SC CARRERA 587/1 692/3A
-	E PCG 108 902 00	set of seals for carburetor SOLEX-40 P II		2	
1	E 616 100 975 00	housing		1	1600 S90/SC 587/1
(1)	E 692 100 961 00	housing		1	692/3A
2	616 100 912 02	throttle shaft		1	1600 S90/SC 587/1
(2)	E 692 100 959 00	throttle shaft		1	692/3A
3	E 616 100 909 02	throttle valve		2	1600 S90
(3)	616 108 912 00	throttle valve		2	1600 SC
(3)	E 616 100 909 03	throttle valve		2	587/1
(3)	E 692 100 982 00	throttle valve		2	692/3A
4	E 616 100 917 00	rais. counters. h. tap. s.		4	
5	E 616 100 978 00	throttle lever	/R	1	1600 S90/SC
(5)	E 587 108 016 00	throttle lever	/R	1	587/1
(5)	E 692 100 978 00	throttle lever	/R	1	692/3A
6	616 100 977 00	throttle lever	/L	1	1600 S90/SC
(6)	E 587 108 015 00	throttle lever	/L	1	587/1
(6)	E 692 100 977 00	throttle lever	/L	1	692/3A
7	E 616 100 918 00	lever		1	
8	E 616 100 921 00	straight pin		1	
9	E 616 100 922 00	return spring		1	
10	E 616 100 815 00	washer		1	
11	911 100 945 00	tab washer		2	
12	E 616 100 913 00	hexagon nut		2	
13	E 616 100 976 00	threaded pin		2	

Pos	Part Number	Name	Remarks	Qty	Model
14	616 100 934 00	adjusting screw idle speed M 807 001 >> only right carburetor		1	1600 S90/SC
-	E 616 100 924 01	washer M 807 001 >> only right carburetor		1	1600 S90/SC
(14)	616 100 923 00	adjusting screw idle speed		1	
15	616 100 814 00	compression spring		1	
16	E 616 100 936 00	pump jet GP 50		2	
17	616 100 937 00	sealing ring		2	
18	E 616 100 901 03	idle jet		2	
19	E 616 100 927 01	adjusting screw idle speed		2	1600 S90/SC
(19)	E 616 100 927 00	adjusting screw idle speed		2	587/1 692/3A
20	616 100 814 00	compression spring		2	
21	E 616 100 914 01	jet carrier		2	
22	616 100 915 00	sealing ring alternative parts:		2	
23	E 616 100 935 00	main vent GG 0115		2	1600 S90/SC
(23)	E 692 100 964 00	main vent GG 140		2	587/1
(23)	E 692 100 964 01	main vent GG 130		2	
(23)	E 692 100 964 04	main vent GG 135 only for racing		2	587/1
(23)	E 692 100 964 02	main vent GG 145		2 2	
(23)	E 692 100 964 03	main vent GG150		2	
24	616 100 943 01	ball valve		1	1600 S90/SC
(24)	616 100 943 00	ball valve		1	587/1 692/3A
25	616 100 944 00	strainer		1	
26	616 100 937 00	sealing ring		1	
27	616 100 931 00	stud		2	
28	901 108 977 00	hexagon nut		2	
29	616 100 931 00	stud		2	
30	901 108 977 00	hexagon nut		2	
31	616 100 928 00	screw plug		1	
32	901 108 976 00	sealing ring		1	
33	E 616 100 938 00	enrichment jet 0,7 CAL.		2	
34	E 616 100 902 02	idle jet U 1,8		2	1600 S90/SC
34	E 692 100 963 00	idle jet U 1,6		2	587/1 692/3A
35	616 100 933 01	air duct		2	
36	616 100 930 00	venturi 32		2	1600 S90/SC
(36)	E 616 100 930 01	venturi K 36		2	587/1
(36)	E 692 100 962 00	venturi K 38		2	692/3A
37	616 100 907 02	mixing tube NR. 25 alternative parts:		2	
38	616 100 900 02	air correction jet A 180		2	1600 S90/SC 587/1
(38)	E 616 100 900 04	air correction jet A 160 only for racing		2	587/1
(38)	E 692 100 965 00	air correction jet A 220		2	692/3A
39	E 616 100 906 01	float 7,4 GR		1	
40	616 100 911 01	axle		1	

Pos	Part Number	Name	Remarks	Qty	Model
41	616 100 940 00	joint level adjustment		1	
42	616 100 911 00	axle		2	
43	E 616 100 995 00	tab washer		1	
44	616 100 941 00	adjusting screw level adjustment		1	
45	901 108 977 00	hexagon nut		1	
46	616 100 971 00	carburettor needle valve complete 1,75 MM with spring and ball		1	
47	616 108 423 00	sealing ring		1	
48	616 100 979 00	injection pipe	/L	1	1600 S90/SC
(48)	616 100 980 00	pipe	/L	1	587/1
(48)	E 692 100 967 00	injection pipe	/L	1	692/3A
(48)	616 100 980 00	injection pipe	/R	1	1600 S90/SC
(48)	692 100 966 01	injection pipe	/R	1	587/1
(48)	E 692 100 966 00	injection pipe	/R	1	692/3A
49	692 100 968 00	gasket		2	
50	616 100 947 00	oval-head screw		2	
51	E 616 100 969 00	spacer screw		2	
52	616 100 970 00	compression spring		2	
53	616 100 867 00	banjo bolt		1	1600 S90/SC
(53)	E 692 100 979 00	banjo bolt		1	587/1 692/3A
54	616 108 423 00	sealing ring		1	
55	616 100 968 00	gasket		1	
56	E 616 100 967 02	cover complete not for (D)+(S) M 812 402 >> for (D)+(S) M 821 111 >>		1	1600 SC
(56)	616 100 967 01	cover complete		1	587/1
(56)	616 100 967 00	cover complete		1	1600 S90 692/3A
57	E 616 100 972 00	fastening screw		6	
58	E 616 100 973 00	spring washer		6	
-	E 692 100 980 00	ring piece		1	
-	E 616 08 719	strainer		1	
-	E 692 100 981 00	sealing ring		1	
-	E 587 100 902 00	gasket set carburetor		1	
59	999 522 003 02	tension spring		1	
60	616 100 934 00	fastening screw		2	
61	E 616 100 973 00	spring washer		2	
62	692 100 969 00	diaphragm pump complete NR. 72		1	
63	616 100 950 00	lower part diaphragm pump		1	
64	PCG 100 951 00	diaphragm complete		1	
65	616 100 952 00	spring		1	
66	E 616 100 957 00	gasket		1	
67	692 100 970 00	cover complete		1	
68	616 100 954 01	cover		1	
69	E 692 100 971 00	lever		1	
70	616 100 956 00	axle		1	
71	E 616 100 939 00	countersunk-head screw		2	

Pos	Part Number	Name	Remarks	Qty	Model
72	E 616 100 958 00	oval-head screw		4	
73	692 100 972 00	connecting rod complete		1	
74	616 100 961 00	spring		1	
75	616 100 962 00	washer		1	
76	E 616 100 963 00	cotter pin		1	
77	E 616 100 973 00	connecting rod		1	
78	616 100 964 00	adjusting nut		1	
79	616 100 925 00	hexagon nut		1	
80	900 031 009 02	washer		2	
81	616 100 966 01	cotter pin		2	587/1
(81)	616 100 966 00	cotter pin		2	1600 S90/SC 692/3A
		- -- E N D -- -			

Pos	Part Number	Name	Remarks	Qty	Model

Model	Year	MG	SG	Illustration	Restrictions	Update	13:01	27.10.2005	PORSCHE PET PORSCHE
356	65	1	07	107-17		194			

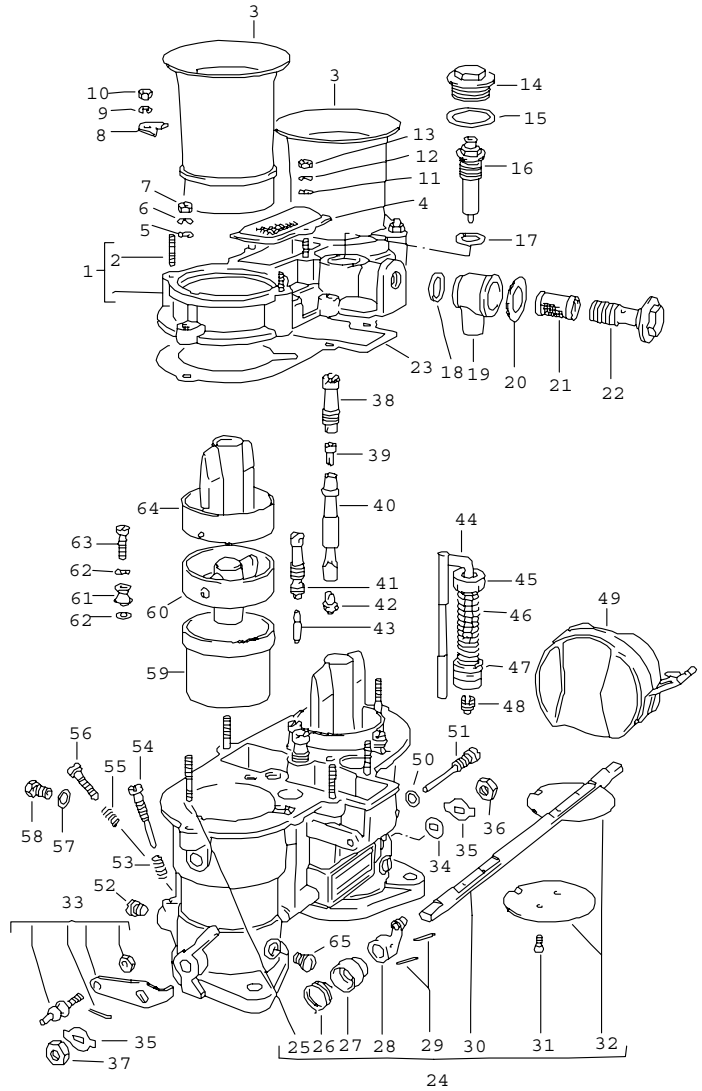

Pos	Part Number	Name	Remarks	Qty	Model
		single parts for carburetor WEBER 46 IDM 2			CARRERA 587/2
1	E 692 100 905 01	cover		1	
2	E 547 100 914 00	stud		6	
3	E 547 100 901 00	intake manifold complete		2	
4	E 547 100 902 00	strainer		1	
5	E 692 100 951 00	washer		5	
6	E 692 100 952 00	lock ring		5	
7	E 692 100 953 01	nut		5	
8	E 692 100 955 01	plate		4	
9	E 692 100 952 00	lock ring		4	
10	E 692 100 953 01	nut		4	
11	E 692 100 951 00	washer		2	
12	E 692 100 952 00	lock ring		2	
13	E 692 100 953 01	nut		2	
14	901 100 801 00	screw plug		1	
15	692 100 902 00	gasket		1	
16	E 692 100 903 00	carburettor needle valve 3,00		1	
17	E 692 100 904 00	gasket		1	
18	901 100 915 00	sealing ring		1	
19	E 692 100 949 00	housing		1	
20	901 100 916 00	sealing ring		1	
21	E 901 100 808 00	strainer		1	
22	E 692 100 946 01	fastening screw		1	
23	E 692 100 906 01	gasket		1	
24	692 100 913 01	housing		1	
25	692 100 914 01	stud		5	
26	E 692 100 915 01	tension spring		1	

Pos	Part Number	Name	Remarks	Qty	Model
27	E 547 100 905 00	spring guide		1	
28	E 547 100 906 00	lever		1	
29	901 100 812 00	pin		2	
30	692 100 921 01	throttle shaft		1	
31	E 692 100 919 00	fastening screw		4	
32	E 692 100 920 01	throttle valve		2	
33	E 587 108 017 00	throttle lever	/L	1	
33	E 587 108 018 00	throttle lever	/R	1	
34	E 692 100 928 00	spacer		1	
35	E 692 100 917 00	lock washer		2	
36	692 100 918 00	nut		1	
37	692 100 918 00	nut		1	
38	E 692 100 933 00	bracket		2	
39	E 692 100 943 12	air correction jet		2	
(39)	E 692 100 943 13	air correction jet		2	
40	E 692 100 942 01	mixing tube F 11		2	
(40)	E 692 100 942 02	mixing tube F 20		2	
41	E 692 100 945 00	bracket idle jet 1,20		2	
42	E 692 100 941 03	main vent 165		2	
(42)	E 692 100 941 05	main vent 175		2	
43	E 692 100 944 01	idle jet F 10/060		2	
44	E 692 100 907 02	operating rod		1	
45	E 692 100 908 01	bush		1	
46	E 692 100 909 00	return spring		1	
47	E 692 100 912 01	piston		1	
48	E 547 100 903 00	suction valve		1	
49	E 692 100 933 01	float complete 20,5 GR		1	
50	901 100 917 00	sealing ring		1	
51	E 692 100 928 01	axle for float		1	
52	E 692 100 922 00	screw		2	
53	692 100 927 00	compression spring		2	
54	E 692 100 925 01	screw		2	
55	692 100 927 00	compression spring		1	
56	E 692 100 926 00	screw		1	
57	901 100 918 00	sealing ring		1	
58	692 100 930 01	drain plug		1	
59	E 692 100 937 08	venturi		2	
60	E 692 100 938 03	atomiser 4,5		2	
61	E 692 100 935 05	pump jet 0,40		2	
(61)	E 692 100 935 06	pump jet 0,50		2	
62	901 100 919 00	sealing ring		4	
63	E 692 100 936 00	exhaust valve		2	
64	E 547 100 913 01	extension for atomiser		2	
65	E 547 100 904 00	screw plug		2	
>>>	547 100 891 00	gasket set for carburetor comprising: picture 15, 17, 18, 20, 23, 50, 57, 62		1	
		- -- E N D -- -			

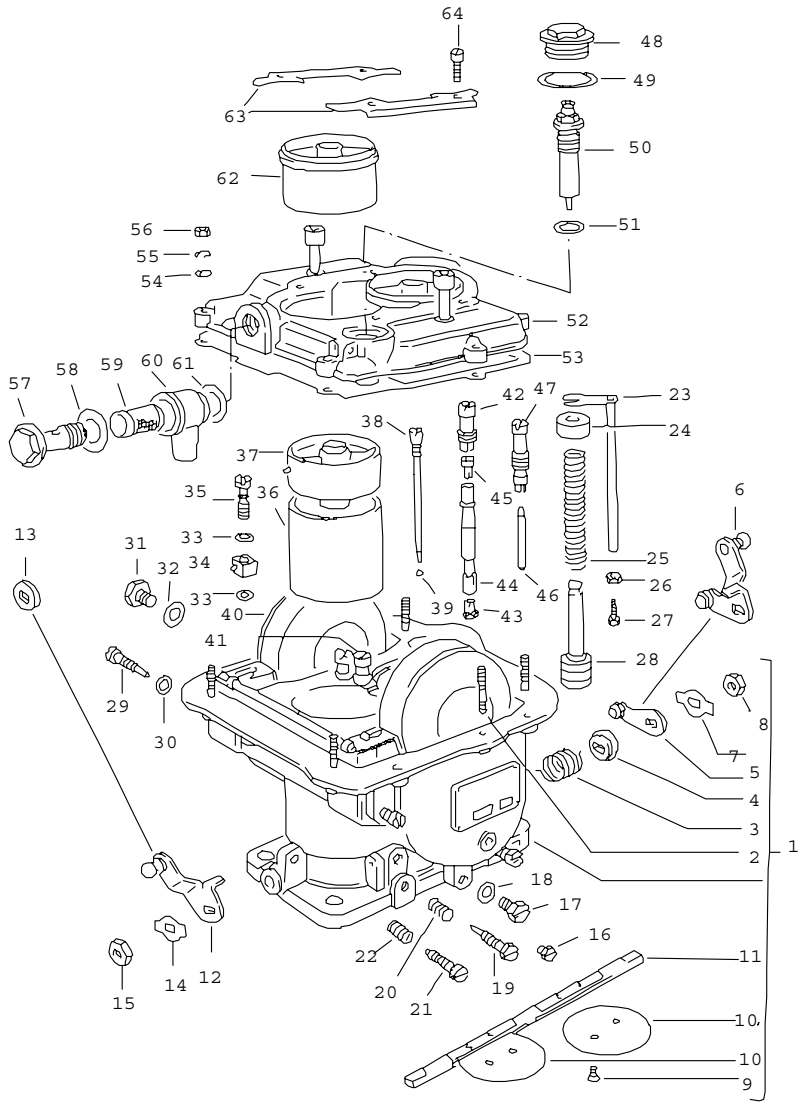

Pos	Part Number	Name	Remarks	Qty	Model
		single parts for carburetor WEBER 40 DCM 2			CARRERA 692/3
1	692 100 913 00	housing complete		1	
2	692 100 914 00	stud		6	
3	E 692 100 915 00	tension spring		1	
4	E 692 100 916 00	washer		1	
5	E 692 108 014 00	lever	/R	1	
6	E 692 108 017 00	lever	/L	1	
7	E 692 100 917 00	lock washer		1	
8	692 100 918 00	nut		1	
9	E 692 100 919 00	fastening screw		4	
10	E 692 100 920 00	throttle valve		2	
11	E 692 100 921 00	throttle shaft		1	
12	E 692 108 018 00	throttle lever	/R	1	
13	E 692 100 928 00	spacer	/L	1	
14	E 692 100 917 00	lock washer		1	
15	692 100 918 00	nut		1	
16	E 692 100 922 00	screw		2	
17	E 692 100 923 00	drain plug		1	
18	E 692 100 924 00	gasket		1	
19	E 692 100 925 00	screw		2	
20	692 100 927 00	compression spring		2	
21	E 692 100 926 00	screw		1	
22	692 100 927 00	compression spring		1	
23	E 692 100 907 00	operating rod		1	
24	E 692 100 908 00	bush		1	
25	E 692 100 909 00	return spring		1	
26	E 692 100 910 00	nut		1	

Pos	Part Number	Name	Remarks	Qty	Model
27	E 692 100 911 00	screw		1	
28	E 692 100 912 00	piston		1	
29	E 692 100 929 00	axle for float		2	
30	E 692 100 930 00	gasket		2	
31	E 692 100 931 00	drain plug		1	
32	E 692 100 932 00	gasket		1	
33	901 100 919 00	sealing ring (67 GR)		2	
34	E 692 100 935 00	pump jet 0,45		1	
35	E 692 100 936 00	exhaust valve		1	
36	E 692 100 937 00	venturi (38)		2	
37	E 692 100 938 00	atomiser 3,50		2	
38	E 692 100 939 00	adjusting screw		1	
39	E 692 100 940 00	ball		1	
40	E 692 100 957 00	float		2	
41	E 692 100 933 00	bracket mixing tube		1	
42	E 692 100 933 00	bracket mixing tube		1	
43	E 692 100 941 00	main vent 1,30		2	
44	E 692 100 942 00	mixing tube F 4		2	
45	E 692 100 943 00	air correction jet 1,90		2	
46	E 692 100 944 00	idle jet 50 X 45		2	
47	E 692 100 945 00	bracket idle jet 1,20		2	
48	901 100 801 00	screw plug		1	
49	692 100 902 00	gasket		1	
50	E 692 100 903 00	carburettor needle valve 3,0		1	
51	E 692 100 904 00	gasket		1	
52	E 692 100 905 00	cover		1	
53	E 692 100 906 00	gasket		1	
54	E 692 100 951 00	washer		6	
55	E 692 100 952 00	lock ring		6	
56	E 692 100 953 00	nut		6	
57	E 692 100 946 00	fastening screw		1	
58	901 100 915 00	sealing ring		1	
59	E 901 100 808 00	strainer		1	
60	E 692 100 949 00	housing		1	
61	901 100 916 00	sealing ring		1	
62	E 692 100 954 00	extension for atomiser		2	
63	692 100 955 00	plate		2	
64	692 100 956 00	screw		4	

- -- E N D -- -

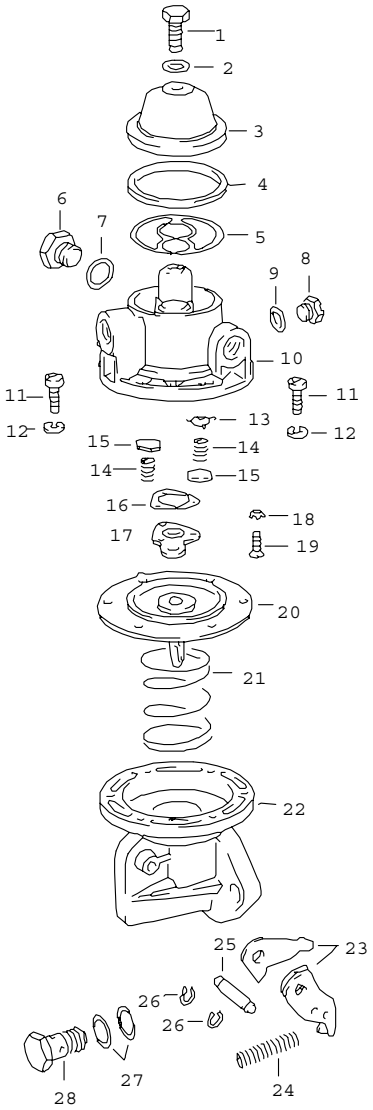

Pos	Part Number	Name	Remarks	Qty	Model
		single parts for fuel pump			356B
		valid up to:			
		M >> 611 000 M >> 706 000 M >> 807 000			1600 1600 S 1600 S90
-	616 108 903 00	repair kit		1	
1	616 108 420 00	hexagon-head bolt		1	
2	616 108 421 00	sealing ring		1	
3	616 108 419 00	cap		1	
4	616 108 418 00	sealing ring		1	
5	616 108 417 00	fuel strainer		1	
6	616 108 422 00	cover		1	
7	616 108 423 00	sealing ring		1	
8	E 616 108 424 00	cover M 8 X 1		1	
9	616 108 425 00	sealing ring		1	
10	E 616 108 411 00	housing upper part		1	
11	900 015 012 00	oval-head screw M 5 X 15		6	
12	N 012 005 3	lock ring A 5		6	
13	616 108 414 00	spring hanger		1	
14	616 108 413 00	valve spring		2	
15	616 108 412 00	plate		2	
16	616 108 415 00	gasket		1	
17	616 108 416 00	valve plate		1	
18	N 012 140 1	shake-proof washer		1	
19	900 013 001 02	countersunk-head screw		1	
20	616 108 426 00	diaphragm		1	
21	616 108 427 00	spring 2,8 KG		1	

Pos	Part Number	Name	Remarks	Qty	Model	Pos	Part Number	Name	Remarks	Qty	Model
22	616 108 428 00	lower part		1							
23	616 108 429 00	lever		1							
24	616 108 431 00	compression spring		1							
25	616 108 430 00	axle		1							
26	999 041 001 01	snap ring		2							
27	616 108 423 00	sealing ring		2							
28	616 108 432 00	banjo bolt		1							
		- -- E N D -- -									

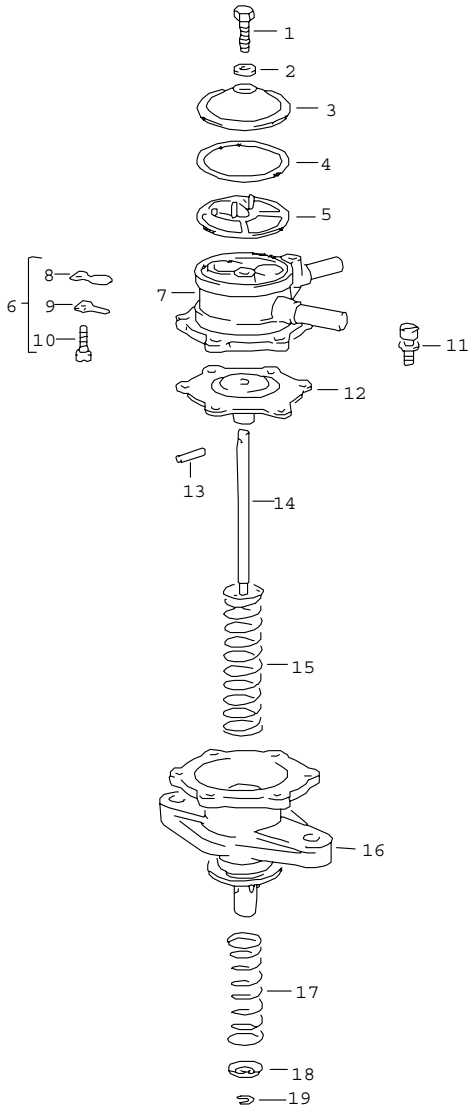

Pos	Part Number	Name	Remarks	Qty	Model
		single parts for fuel pump			356B/C
		valid from:			
		M 611 001 >> M 706 001 >> M 807 001 >>			1600 1600 S 1600 S90 1600 C/SC
1	616 108 904 08	hexagon-head bolt PK 10 936		1	
2	E 702 108 422 00	sealing ring PK 10 937		1	
3	E 616 108 904 05	cap PK 10 931		1	
4	616 108 904 07	sealing ring PK 17 629		1	
5	616 108 904 06	fuel filter PK 17 66		1	
6	E 616 108 904 00	upper part complete PZK 5 579		1	
7	E 616 108 904 01	upper part PZK 5 580		1	
8	616 108 904 02	leaf spring PK 18 137		1	
9	616 108 904 03	valve limitation PK 18 190		1	
10	616 108 904 04	pan-head screw PK 18 138 M 3 X 8		1	
11	616 108 904 17	pan-head screw PZK 5 096		6	
12	616 108 904 09	diaphragm PZK 5 354		1	
13	616 108 904 11	pin PK 18 120		1	
14	616 108 904 10	cam follower PK 18 453		1	
15	616 108 904 12	spring PK 18 121		1	

Pos	Part Number	Name	Remarks	Qty	Model
16	E 616 108 904 13	lower part PZK 5 581		1	
17	616 108 904 14	spring PK 18 122		1	
18	616 108 904 15	concave washer PK 18 123		1	
19	616 108 904 16	lock washer PK 18 124		1	
		- -- E N D -- -			

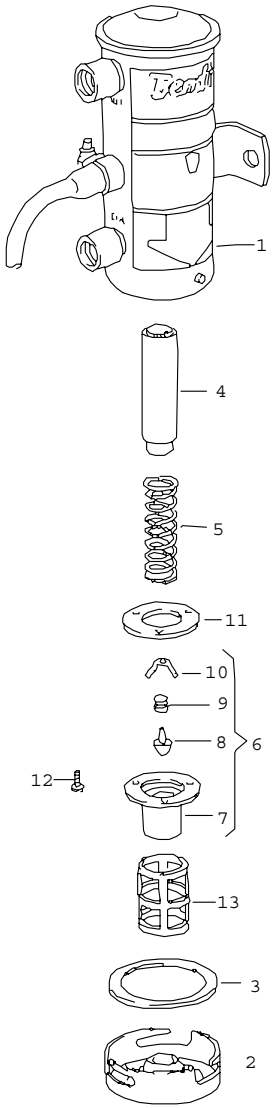

Pos	Part Number	Name	Remarks	Qty	Model
		single parts for fuel pump			CARRERA 587/1/2 692/3/3A
1	-	housing for fuel pump not available			
-	999 136 005 01	adapter		1	
2	E 692 608 901 00	cover		1	
3	E 692 608 902 00	sealing ring		1	
4	E 692 608 903 00	piston		1	
5	E 692 608 904 00	spring		1	
6	E 692 608 905 00	valve housing complete		1	
7	E 692 608 906 00	valve housing		1	
8	E 692 608 907 00	valve		1	
9	E 692 608 908 00	valve spring		1	
10	E 692 608 909 00	concave washer		1	
11	E 692 608 910 00	gasket		1	
12	E 692 608 911 00	tapping screw		3	
13	E 692 608 912 00	fuel strainer		1	
		- -- E N D -- -			

Model	Year	MG	SG	Illustration	Restrictions	Update		
356	65	1	98	REP		194	14:39	02.11.2005

Pos	Part Number	Name	Remarks	Qty	Model
		set of seals engine crankcase piston rings			
>>	> 616 100 180 00	set of seals engine comprising:		1	356 B-T5: 1600 /S
-	616 104 951 00	gasket cork for cover		2	
-	539 04 203	sealing ring cylinder head nut		8	
-	539 04 209	gasket for cylinder		4	
-	539 05 207	gasket cam follower protective tube		16	
-	502 08 110	gasket intake manifold		2	
-	597 108 310 01	gasket carburetor		2	
-	999 701 043 50	o-ring intermediate flange		1	
-	616 108 440 00	flange with gaskets		1	
-	616 111 291 00	gasket exhaust silencer		4	
-	546 07 829	gasket oil filter		1	
-	900 123 006 25	sealing ring A 12 X 18 screw socket		1	
-	900 123 066 30	sealing ring A 10 X 16		2	
-	369 01 111	washer for distributing piece		2	
-	900 123 008 30	sealing ring A 14 X 20 remote temperature sensor oil temperature		1	

Model	Year	MG	SG	Illustration	Restrictions	Update		
356	65	1	98	REP		194	14:39	02.11.2005

Pos	Part Number	Name	Remarks	Qty	Model
-	539 07 726	sealing ring bleeder cover		1	
-	000 97 301	sealing ring bleeder		1	
-	999 701 101 50	sealing ring distributor		1	
-	616 108 423 00	sealing ring banjo bolt		7	
>>	> 616 100 180 01	set of seals engine comprising:		1	356 B-T5: 1600 S90
-	616 104 951 00	gasket cork for cover		2	
-	539 04 203	sealing ring cylinder head nut		8	
-	539 04 209	gasket cylinder		4	
-	539 05 207	gasket cam follower protective tube		16	
-	616 108 390 00	flange complete		4	
-	616 108 905 00	gasket intake manifold		2	
-	999 701 043 50	o-ring intermediate flange		1	
-	616 108 440 00	flange with gaskets		1	
-	616 111 291 00	gasket exhaust silencer		4	
-	546 07 829	gasket oil filter		1	
-	900 123 006 25	sealing ring A 12 X 18 screw socket		1	
-	900 123 066 30	sealing ring A 10 X 16		2	
-	369 01 111	washer distributing piece		2	

Model	Year	MG	SG	Illustration	Restrictions	Update		
356	65	1	98	REP		194	14:39	02.11.2005

Pos	Part Number	Name	Remarks	Qty	Model
-	900 123 008 30	sealing ring A 14 X 20 remote temperature sensor oil temperature		1	
-	539 07 726	sealing ring bleeder cover		1	
-	000 97 301	sealing ring bleeder		1	
-	999 701 101 50	sealing ring distributor		1	
-	616 108 423 00	sealing ring		7	
>>	> 616 100 184 00	set of seals engine for set of seals 616. 00.804 / 616.100.180.00/ 616.100.180.01 comprising:		1	356 B-T6 356 C
-	539 04 203	gasket cylinder head nut		8	
-	539 04 209	gasket for cylinder		4	
-	616 104 951 00	gasket for cover		2	
-	539 05 207	gasket cam follower protective tube		16	
-	502 08 110	gasket intake manifold		2	
-	597 108 310 01	gasket carburetor		2	
-	616 108 423 00	sealing ring for banjo bolt		7	
-	616 108 905 00	gasket intake manifold		2	
-	999 701 101 50	sealing ring distributor		1	
-	616 111 291 00	gasket exhaust silencer		4	
-	616 111 291 00	gasket exhaust silencer		4	

Model	Year	MG	SG	Illustration	Restrictions	Update		
356	65	1	98	REP		194	14:39	02.11.2005

Pos	Part Number	Name	Remarks	Qty	Model
		set of seals crankcase			
>>	> 616 100 181 00	set of seals crankcase comprising:		1	356 B-T5: 1600 S
-	616 01 124 1	gasket crankcase cover		1	
-	999 701 006 40	o-ring		7	
-	999 113 029 50	radial sealing ring DG 60 X 80 X 10/1		1	
-	539 01 122	rubber seal oil duct		1	
-	616 01 123	rubber seal oil duct and oil cooler		4	
-	539 01 125	gasket generator bracket		1	
-	999 113 012 50	shaft seal DG 48 X 65 X 10/1		1	
-	539 01 152	gasket		2	
-	502 02 301	gasket 8-LOCH flywheel		1	
-	E 900 123 025 70	sealing ring C 18 X 24 relief valve		2	
-	616 01 115	plug rubber for oil tube		2	
-	E 616 102 163 01	sealing washer		1	
-	E 539 07 109	gasket cover oil pump small		1	
-	616 107 902 01	gasket cover oil pump large		1	

Model	Year	MG	SG	Illustration	Restrictions	Update		
356	65	1	98	REP		194	14:39	02.11.2005

Pos	Part Number	Name	Remarks	Qty	Model
-	900 123 010 20	sealing ring A 20 X 24 CU driving mechanism tachometer		1	
-	539 07 117	sealing ring rubber driving mechanism tachometer		1	
>>	> 616 100 181 01	set of seals crankcase comprising:		1	356 B-T5: 1600 S90
-	616 01 124 1	gasket crankcase cover		1	
-	999 701 006 40	o-ring		7	
-	999 113 029 50	radial sealing ring		1	
-	539 01 122	rubber seal oil duct		1	
-	616 01 123	rubber seal oil duct and oil cooler		4	
-	539 01 125	gasket generator bracket		1	
-	999 113 012 50	shaft seal DG 48 X 65 X 10/1		1	
-	539 01 152	gasket		3	
-	E 616 101 931 00	gasket valve housing		1	
-	E 616 101 932 00	gasket		1	
-	502 02 301	gasket flywheel		1	
-	E 900 123 025 70	sealing ring relief valve		2	
-	616 01 115	plug rubber for oil tube		2	
-	E 616 102 163 01	sealing washer		1	
-	E 539 07 109	gasket cover oil pump small		1	

Model	Year	MG	SG	Illustration	Restrictions	Update		
356	65	1	98	REP		194	14:39	02.11.2005

Pos	Part Number	Name	Remarks	Qty	Model
-	616 107 902 01	gasket cover oil pump		1	
-	900 123 010 20	sealing ring A 20 X 24 CU driving mechanism tachometer		1	
-	539 07 117	rubber seal rubber driving mechanism tachometer		1	
>>	> 616 101 901 00	set of seals crankcase for set of seals 539. 00.801 / 616. 00.801 / 616. 00.802 / 616.100.181.00/ 616.100.181.01 comprising:		1	356 B-T6 356 C
-	369 01 111	washer		1	
-	539 01 106	gasket cover		1	
-	539 01 122	sealing ring rubber for oil duct		2	
-	E 911 101 123 00	sealing ring oil duct and oil cooler		4	
-	539 01 124	gasket crankcase cover		1	
-	539 01 125	gasket generator bracket		1	
-	539 01 152	gasket		3	
-	616 01 115	plug rubber for oil tube		2	
-	616 01 123	rubber seal oil duct and oil cooler		4	

Model	Year	MG	SG	Illustration	Restrictions	Update		
356	65	1	98	REP		194	14:39	02.11.2005

Pos	Part Number	Name	Remarks	Qty	Model
-	616 01 124 1	gasket crankcase cover		1	
-	616 101 191 00	washer		7	
-	E 616 101 931 00	gasket		1	
-	E 616 101 932 00	gasket		1	
-	502 02 301	gasket flywheel		1	
-	E 616 102 163 01	sealing washer		1	
-	539 07 108	gasket		1	
-	E 539 07 109	gasket		1	
-	539 07 117	sealing ring rubber tachometer driving mechanism		1	
-	616 107 902 01	gasket		1	
-	000 97 301	o-ring		1	
-	000 97 326	o-ring		1	
-	E 000 97 327	o-ring		1	
-	999 701 043 50	o-ring		1	
-	999 701 006 40	o-ring		7	
-	999 113 012 50	shaft seal DG 48 X 65 X 10/1		1	
-	999 113 029 50	radial sealing ring DG 60 X 80 X 10/1		1	
-	999 701 006 40	o-ring 8 X 2		1	
-	900 123 008 30	sealing ring aluminium 14 X 20 X 1,5		1	
-	900 123 010 30	sealing ring aluminium 20 X 24 X 1,5		1	
-	N 013 806 2	sealing ring copper 10 X 14 X 1		2	
-	900 123 006 25	sealing ring copper 12 X 18 X 1,5		1	

Model	Year	MG	SG	Illustration	Restrictions	Update		
356	65	1	98	REP		194	14:39	02.11.2005

Pos	Part Number	Name	Remarks	Qty	Model
-	E 900 123 025 70	sealing ring C 18 X 24		2	
-	539 04 203	sealing ring for oil tube		1	
-	616 101 391 00	gasket crankcase cover		1	
>>	> 616 03 903	set of piston rings cylinder aluminium $ 82,5 MM comprising:		4	1600 S
-	616 103 313 00	piston ring		4	
-	E 616 03 206 1	oil scraper ring		4	
-	E 616 03 207 1	oil scraper ring		4	
		- -- E N D -- -			

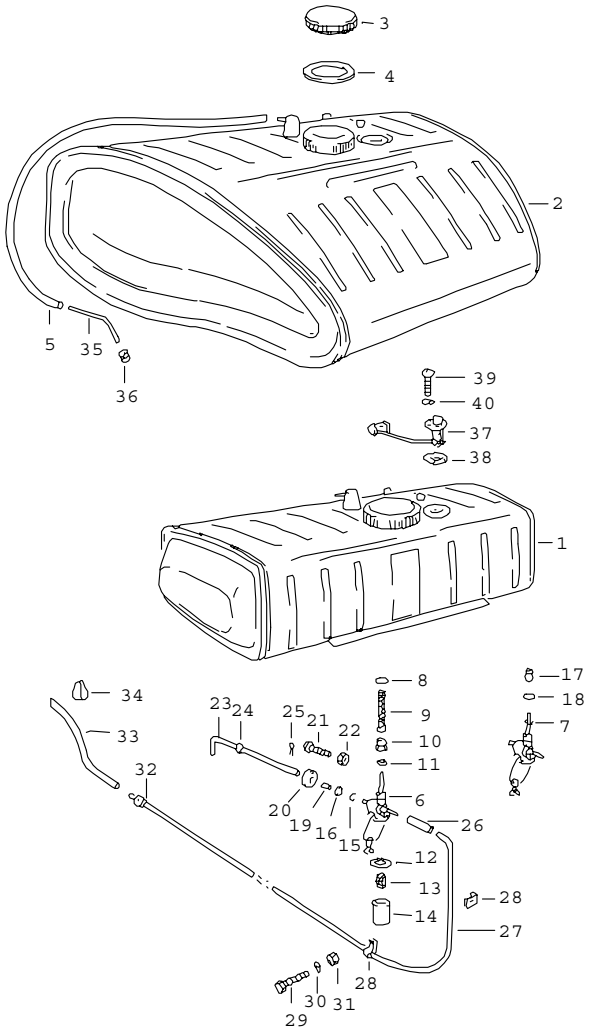

Pos	Part Number	Name	Remarks	Qty	Model
		fuel tank			356 B-T5
1	E 644 201 010 00	fuel tank 50 L		1	1600 /S/S90
2	E 644 201 010 50	fuel tank 80 L		1	CARRERA GT 1600 /S/S90: M
3	644 201 270 00	cover fuel tank		1	
4	644 201 279 00	sealing ring cover		1	
5	E 644 201 611 00	vent hose		1	
6	E 644 201 021 00	switch fuel reserve indicator 50 L		1	1600 /S/S90
7	644 201 021 07	fuel cock fuel reserve indicator 80 L	M	1	CARRERA GT 1600 /S/S90:
-	756 201 021 00	switch		1	CARRERA ABARTH 692/3/3A
-	756 201 281 00	trim for switch		1	CARRERA ABARTH 692/3/3A
-	756 201 283 00	support for sticker "AUF-ZU-RESERVE"		1	CARRERA ABARTH 692/3/3A
8	644 201 291 00	sealing ring		1	
9	644 201 225 00	strainer insert		1	
10	E 644 201 221 00	nut		1	
11	644 201 292 00	sealing washer		1	
12	644 201 203 00	sealing ring		1	
13	644 201 204 00	filter with strainer		1	
14	E 644 201 205 00	filter		1	
15	E 644 201 217 00	circlip		1	
16	644 201 293 00	gasket		1	

Pos	Part Number	Name	Remarks	Qty	Model
17	E 644 201 231 50	sealing ring pipe		1	CARRERA GT 1600 /S/S90: M
18	E 900 123 018 60	sealing ring switch A 16 X 20		1	CARRERA 1600 /S/S90: M
19	E 644 201 243 00	hose piece operating rod		1	
20	644 201 261 00	sticker "AUF-ZU-RESERVE"		1	
21	E 900 016 002 00	half-round screw M 4 X 10		1	
22	900 076 003 00	hexagon nut M 4		1	
23	644 201 241 00	operating rod for switch		1	
24	E 644 025 611 00	rubber sleeve		1	
25	N 012 531 1	cotter pin 3 X 22		1	
26	999 180 030 50	fuel hose 150 MM		1	
27	E 616 108 531 00	fuel line 1860 MM		1	
28	E 356 49 648	clip		2	
29	900 075 003 01	hexagon-head bolt M 5 X 10		2	
30	N 012 225 2	spring washer B 5		2	
31	900 076 005 02	hexagon nut M 5		1	
32	914 356 201 00	rubber sleeve		1	
33	999 180 030 50	fuel hose A 6 X 750		1	
34	999 706 009 80	suspension strap		1	
35	E 644 201 621 00	tail pipe bleeding		1	
36	999 702 020 50	rubber sleeve 8 X 12 X 9		1	
37	E 644 201 801 00	sender fuel-level indicator		1	
38	914 201 891 00	gasket		1	
39	E 900 014 100 02	pan-head screw AM 6 X 16		5	
40	900 025 003 30	washer 5,3 aluminium		5	

- -- E N D -- -

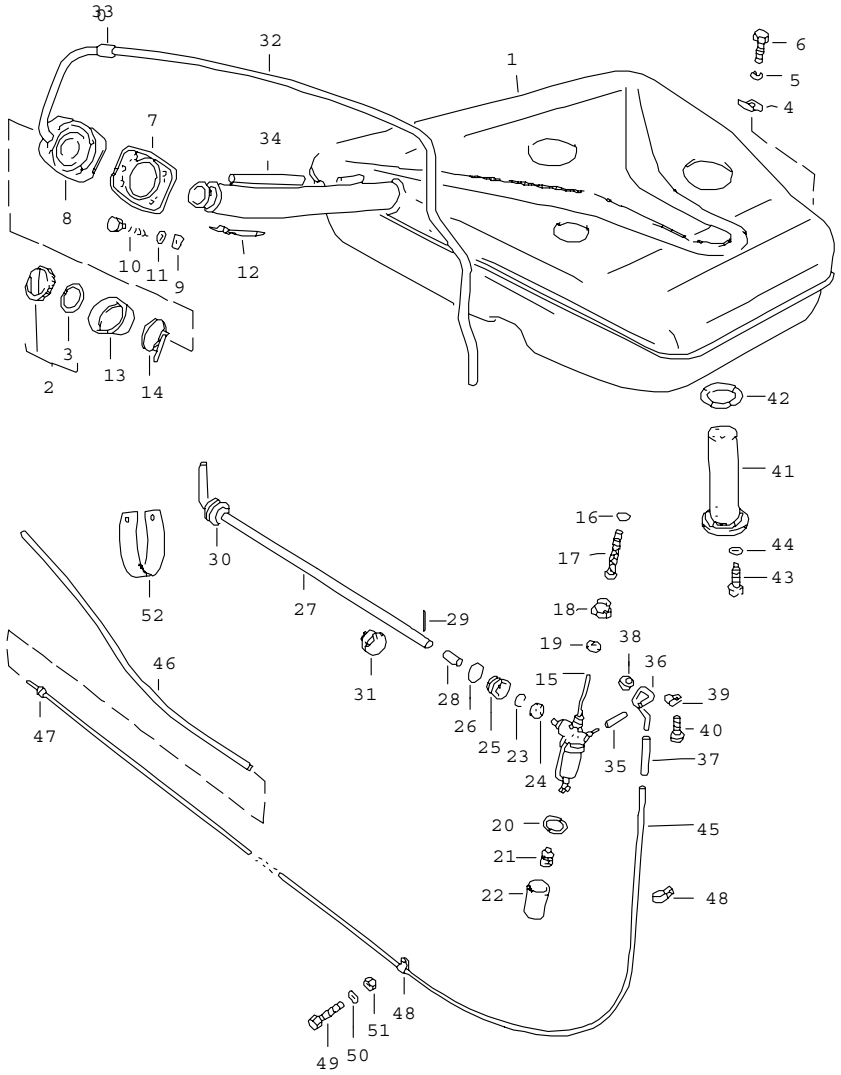

Pos	Part Number	Name	Remarks	Qty	Model
		fuel tank			356 B-T6 356 C
1	644 201 001 07	expansion tank sender lower	/LL	1	
(1)	644 201 001 07	fuel tank 52 L sender upper F 121 224 >> F 211 175 >> F 157 072 >> not for F 121 253 F 121 304	/LL	1	 COUPE -REUTTER- COUPE -KARMANN- CABRIO HARDTOP COUPE -REUTTER COUPE -REUTTER-
(1)	E 644 201 001 20	fuel tank 70 L F 121 224 >> F 211 175 >> F 157 072 >> not for F 121 253 F 121 304	/LL	1	M COUPE -REUTTER- COUPE -KARMANN- CABRIO HARDTOP COUPE -REUTTER COUPE -REUTTER-
(1)	644 201 019 11	fuel tank 110 L with cover without sender		1	CARRERA 2000 GT
(1)	E 644 201 001 08	fuel tank tank filler neck UNTER cover front accessories see group 2/01/00	/RL	1	
2	901 201 271 00	fuel tank cap with gasket		1	

Pos	Part Number	Name	Remarks	Qty	Model
(2)	644 201 028 11	cover please state the colour		1	CARRERA 2000 GT
3	901 201 272 00	sealing ring cover		1	
(3)	644 201 279 00	sealing ring cover		1	CARRERA 2000 GT
-	911 201 279 01	protective flap for filler neck		1	
4	644 201 233 00	support		4	
5	900 027 015 02	lock ring B 8		4	
6	900 075 099 02	hexagon-head bolt M 8 X 30		4	
7	644 201 173 00	flange		2	
8	644 201 175 00	gasket		1	
9	999 507 002 02	speed nut		4	
10	900 187 004 02	hexagon-head tapping screw B 4,8 X 19		4	
11	N 011 523 5	washer 5,3		4	
12	E 644 201 179 00	cup		1	
13	644 201 177 00	sleeve		1	
14	E 644 572 261 05	hose clamp		1	
15	644 201 021 07	switch fuel reserve indicator complete		1	
16	644 201 291 00	sealing ring		1	
17	644 201 225 00	strainer insert		1	
18	E 644 201 221 00	nut		1	
19	644 201 292 00	sealing washer		1	
20	644 201 203 00	sealing ring		1	
21	644 201 204 00	filter with strainer		1	
22	E 644 201 205 00	filter		1	
23	E 644 201 217 00	circlip		1	
24	644 201 293 00	gasket		1	
25	E 644 201 294 00	rubber cap		1	
26	E 644 201 295 00	tension wire for rubber cap		1	
27	E 644 201 241 06	operating rod for switch		1	
28	644 201 243 06	hose piece		1	
29	E 900 012 059 00	straight pin 3 H 11 X 12		2	
30	E 644 201 261 06	sticker switch		1	
31	E 644 201 242 00	rubber sleeve		1	
32	E 644 201 621 07	breather pipe		1	
33	E 999 181 015 50	hose piece 10 X 14 X 20		3	
34	999 180 026 50	fuel hose C 8 X 185 vent hose 52 L		1	
-	E 999 181 016 50	hose piece 10 X 14 X 40		1	
(34)	E -	fuel hose vent hose 70 L F 121 224 >>		1	COUPE -REUTTER-
		F 211 175 >>			COUPE -KARMANN-
		F 157 072 >>			CABRIO HARDTOP
		not for F 121 253			COUPE -REUTTER
		F 121 304			COUPE -REUTTER-
35	999 180 030 50	fuel hose A 6 X 110		1	
36	E 644 201 921 00	fuel line		1	

Pos	Part Number	Name	Remarks	Qty	Model
37	999 180 030 50	fuel hose A 6 X 75		1	
38	E 644 025 677 00	rubber sleeve		1	
39	E 999 511 001 02	clip		1	
40	900 016 014 02	half-round screw AM 4 X 8		1	
41	E 644 201 801 06	sender fuel-level indicator		1	
41	E 644 201 801 07	sender fuel-level indicator 52 L		1	
		F 121 224 >>			COUPE -REUTTER-
		F 211 175 >>			COUPE -KARMANN-
		F 157 072 >>			CABRIO HARDTOP
		not for F 121 253			COUPE -REUTTER
		F 121 304			COUPE -REUTTER-
(41)	E 644 201 801 20	sender fuel-level indicator 70 L		1	M
		F 121 224 >>			COUPE -REUTTER-
		F 211 175 >>			COUPE -KARMANN-
		F 157 072 >>			CABRIO HARDTOP
		not for F 121 253			COUPE -REUTTER
		F 121 304			COUPE -REUTTER-
-	E 644 201 127 00	cover sender		1	
		F 121 224 >>			COUPE -REUTTER-
		F 211 175 >>			COUPE -KARMANN-
		F 157 072 >>			CABRIO HARDTOP
		not for F 121 253			COUPE -REUTTER
		F 121 304			COUPE -REUTTER-
-	E 644 201 129 00	clamping washer		1	
		F 121 224 >>			COUPE -REUTTER-
		F 211 175 >>			COUPE -KARMANN-
		F 157 072 >>			CABRIO HARDTOP
		not for F 121 253			COUPE -REUTTER
		F 121 304			COUPE -REUTTER-
(41)	E 644 201 801 10	sender fuel-level indicator 110 L		1	CARRERA 2000 GT
42	914 201 891 00	gasket		1	
43	900 014 017 02	pan-head screw M 5 X 15		5	
43	E 900 014 058 02	pan-head screw M 5 X 12		5	
		F 121 224 >>			COUPE -REUTTER-
		F 211 175 >>			COUPE -KARMANN-
		F 157 072 >>			CABRIO HARDTOP
		not for F 121 253			COUPE -REUTTER
		F 121 304			COUPE -REUTTER-
44	900 025 003 30	washer 5,3		5	
45	616 108 531 01	fuel line 1700 MM		1	
46	999 180 030 50	fuel hose A 6 X 750		1	
47	914 356 201 00	rubber sleeve		1	
48	E 356 49 648	clip		2	
49	N 010 205 6	hexagon-head bolt M 5 X 10		2	
50	N 012 225 2	spring washer B 5		2	
51	900 076 006 02	hexagon nut M 5		1	

Pos	Part Number	Name	Remarks	Qty	Model
52	999 706 009 80	suspension strap		1	
-	E 644 201 299 11	gasket fuel tank cover front		1	CARRERA 2000 GT
-	644 201 181 10	screw plug drain plug		1	CARRERA 2000 GT
-	900 123 003 60	sealing ring A 10 X 14		1	CARRERA 2000 GT
-	E 644 201 033 00	restraining strap	/L	1	CARRERA 2000GT
-	E 644 201 034 00	restraining strap	/R	1	CARRERA 2000GT
-	999 512 004 02	connecting piece restraining strap SP 25		2	CARRERA 2000 GT
-	999 093 010 02	hexagon-head bolt M 8 X 20		4	CARRERA 2000 GT
-	900 027 015 02	lock ring B 8		4	CARRERA 2000 GT
		overflow hose for filler neck			
-	E 644 201 931 06	overflow hose 16 X 20 X 650 F 119 601 >> F 210 240 >> F 156 456 >>		1	COUPE -REUTTER- COUPE -KARMANN- CABRIO HARDTOP
-	E 999 512 101 02	hose clamp 5 X 170 F 119 601 >> F 210 240 >> F 156 456 >>		1	COUPE -REUTTER- COUPE -KARMANN- CABRIO HARDTOP

Pos	Part Number	Name	Remarks	Qty	Model
-	E 900 171 003 02	clip 1 X 20 F 119 601 >> F 210 240 >> F 156 456 >>		1	COUPE -REUTTER- COUPE -KARMANN- CABRIO HARDTOP
-	N 010 205 6	hexagon-head bolt M 5 X 10 F 119 601 >> F 210 240 >> F 156 456 >>		1	COUPE -REUTTER- COUPE -KARMANN- CABRIO HARDTOP
-	900 076 006 02	hexagon nut M 5 F 119 601 >> F 210 240 >> F 156 456 >>		1	COUPE -REUTTER- COUPE -KARMANN- CABRIO HARDTOP
-	N 012 225 2	spring washer B 5 F 119 601 >> F 210 240 >> F 156 456 >>		1	COUPE -REUTTER- COUPE -KARMANN- CABRIO HARDTOP
		fuel tank with tank filler neck wing right	/RL		1600 C/SC
-	E 644 201 010 09	fuel tank 52 L		1	
-	E 644 201 031 09	restraining strap long		2	
-	E 644 201 032 00	restraining strap short		2	
-	644 201 391 09	felt strip 30 X 2 X 520		2	
-	644 201 392 09	felt strip 30 X 2 X 220		2	

Pos	Part Number	Name	Remarks	Qty	Model
-	N 010 215 13	hexagon-head bolt M 6 X 15		4	
-	900 076 010 02	hexagon nut M 6		4	
-	900 027 014 01	lock ring B 6		4	
-	900 075 033 02	hexagon-head bolt M 8 X 40		2	
-	900 025 007 02	washer 8,4		2	
-	E 644 201 922 00	fuel line switch		1	
-	E 644 201 241 09	operating rod switch		1	
-	E 900 012 059 00	straight pin $ 3 X 12		1	
-	E 644 201 801 07	sender fuel-level indicator		1	
-	E 644 201 127 00	cover sender		1	
-	E 644 201 129 00	clamping washer		1	
-	E 644 201 021 00	switch fuel reserve indicator		1	
-	E 644 025 611 00	rubber sleeve		1	
		- -- E N D -- -			

Pos	Part Number	Name	Remarks	Qty	Model

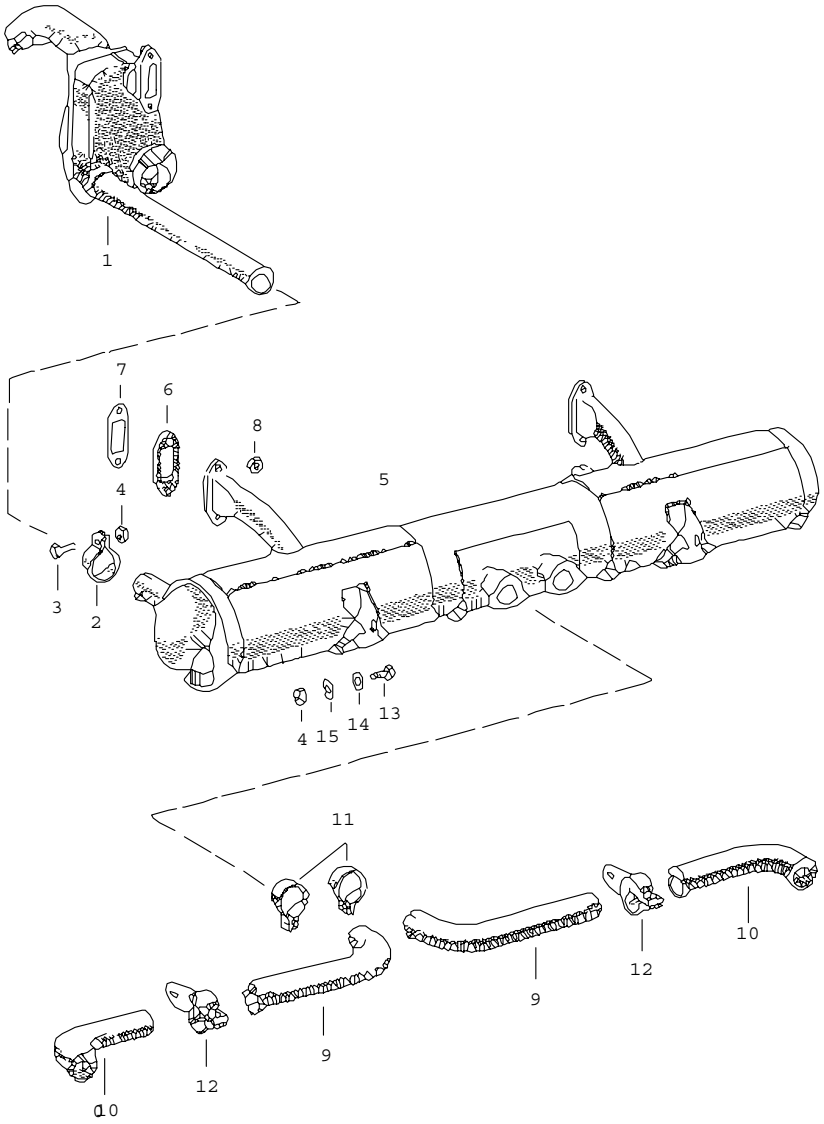

Pos	Part Number	Name	Remarks	Qty	Model
		exhaust system heating old version			356 B/C
1	E PCG 211 901 00	heat control box with exhaust pipe	/L	1	
(1)	E PCG 211 901 00	heat control box with exhaust pipe	/R	1	
2	369 54 109	clip		2	
3	999 093 010 02	hexagon-head bolt M 8 X 20		6	
4	502 08 310	hexagon nut M 8		8	
5	616 111 010 05	retainer		1	
6	369 54 103	flange		4	
7	616 111 291 00	gasket		4	
8	502 08 310	hexagon nut M 8		8	
9	616 111 221 03	intake manifold		2	
10	616 111 223 03	tail pipe		2	
11	616 111 255 01	clip		2	
12	616 111 025 00	clip		2	
13	900 075 078 02	hexagon-head bolt M 8 X 15		2	
14	900 025 007 02	washer 8,4		2	
		- -- E N D -- -			

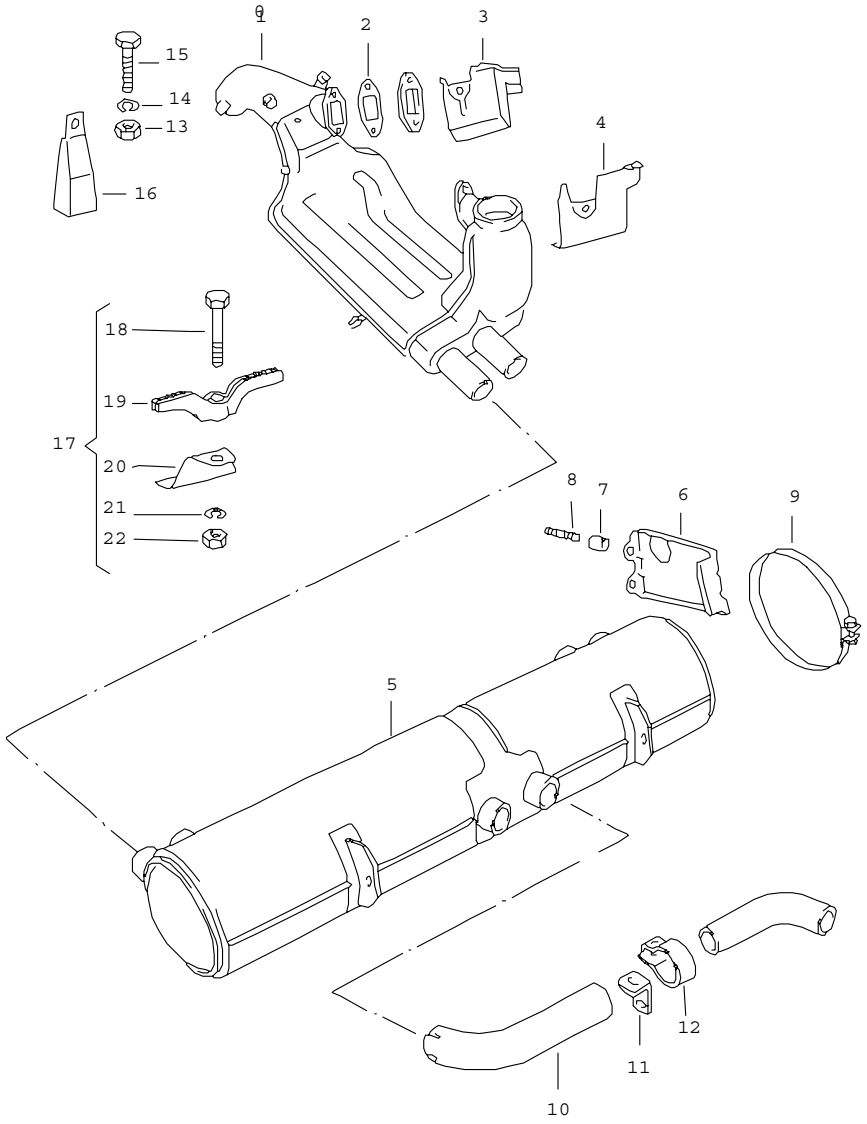

Pos	Part Number	Name	Remarks	Qty	Model
		exhaust system heating new design			356 B/C
1	616 211 021 00	heat exchanger with exhaust pipe	/L	1	
(1)	616 211 022 00	heat exchanger with exhaust pipe	/R	1	
2	616 111 291 00	gasket		4	
3	E 616 106 071 00	air duct lower	/V/L	1	
4	616 106 073 00	air duct lower	/V/R/H/L	2	
(4)	E 616 106 074 00	air duct lower	/H/R	1	
5	616 111 016 05	retainer		1	
-	999 511 039 03	clip for retainer		4	
6	616 111 503 01	bearing		2	
7	E 999 531 104 00	spacer ring		4	
8	999 061 055 01	stud		4	
9	E 999 512 034 02	hose clamp		2	
10	616 111 221 03	exhaust manifold		2	
11	616 111 257 01	bracket		2	
12	616 111 255 01	clip		2	
13	900 076 013 02	hexagon nut M 8		2	
14	900 027 005 01	lock ring A 8		2	
15	900 074 037 02	hexagon-head bolt M 8 X 35		2	
16	E 616 211 245 00	bracket	/L	1	
(16)	E 616 211 246 00	bracket	/R	1	

Pos	Part Number	Name	Remarks	Qty	Model	Pos	Part Number	Name	Remarks	Qty	Model
17	E 616 211 903 00	set of fastening parts for heat exchanger for subsequent installat.		1							
18	N 010 339 3	hexagon-head bolt M 6 X 40		2							
19	616 211 240 00	support	/L/R	2							
20	E 616 211 243 00	bracket	/L/R	2							
21	N 012 007 2	lock ring A 6		2							
22	900 076 010 02	hexagon nut M 6		2							
		- -- E N D -- -									

Model	Year	MG	SG	Illustration	Restrictions	Update	13:04	27.10.2005	PORSCHE PET PORSCHE
356	65	2	02	202-04		194			

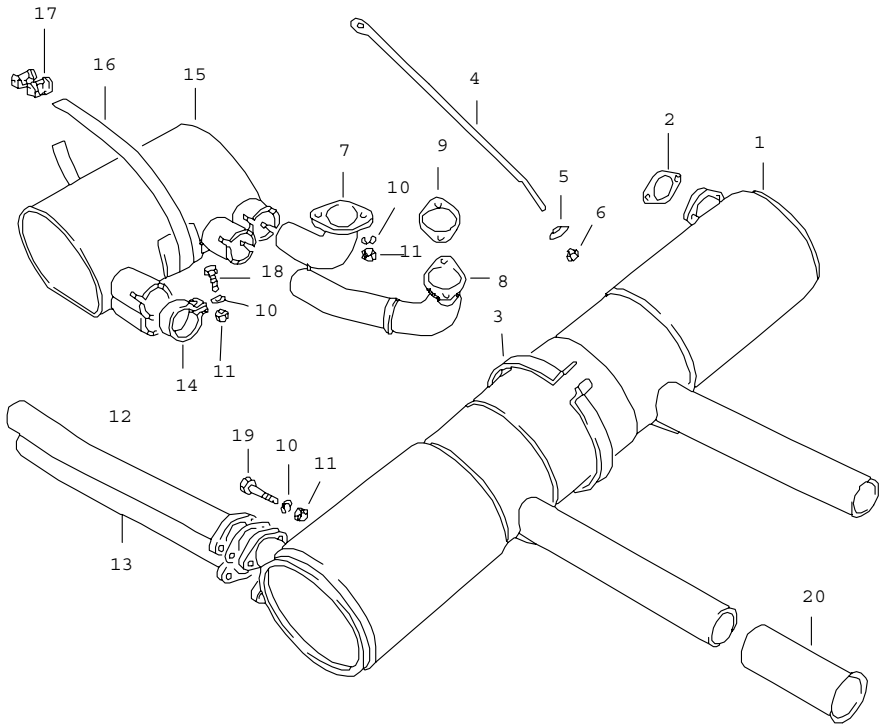

Pos	Part Number	Name	Remarks	Qty	Model
		exhaust system			CARRERA 587/1/2
1	587 111 017 00	exhaust silencer		1	
2	692 111 931 01	gasket		4	
3	999 511 030 02	restraining strap P 951.508		2	
4	E 587 111 051 00	strut	/L	1	
(4)	E 587 111 052 00	strut	/R	1	
5	539 09 201	cap		2	
6	999 084 002 02	hexagon nut M 10 SW 17		4	
7	587 111 023 00	elbow III		1	
(7)	587 111 021 00	elbow I		1	
8	587 111 024 00	elbow IV		1	
(8)	587 111 022 00	elbow II		1	
9	692 111 931 01	gasket		4	
10	900 027 015 02	lock ring B 8		24	
11	E 547 54 221	hexagon nut		24	
12	587 111 027 00	connecting tube III upper left		1	
(12)	587 111 026 00	connecting tube II upper right		1	
13	587 111 025 00	connecting tube I left lower		1	
(13)	587 111 028 00	connecting tube right lower		1	
14	E 900 165 001 03	clip 45,5		8	

Pos	Part Number	Name	Remarks	Qty	Model	Pos	Part Number	Name	Remarks	Qty	Model
15	587 111 015 00	front muffler	/L	1							
(15)	587 111 016 00	front muffler	/R	1							
16	E 999 512 005 02	restraining strap 25X700 P 951.611		2							
17	999 512 004 02	connecting piece		2							
18	900 075 029 02	hexagon-head bolt M 8X25		8							
19	900 075 099 02	hexagon-head bolt M 8X30		8							
20	587 111 261 00	cover		2							
		- -- E N D -- -									

Model	Year	MG	SG	Illustration	Restrictions	Update	13:04	27.10.2005	PORSCHE PET PORSCHE
356	65	2	02	202-05		194			

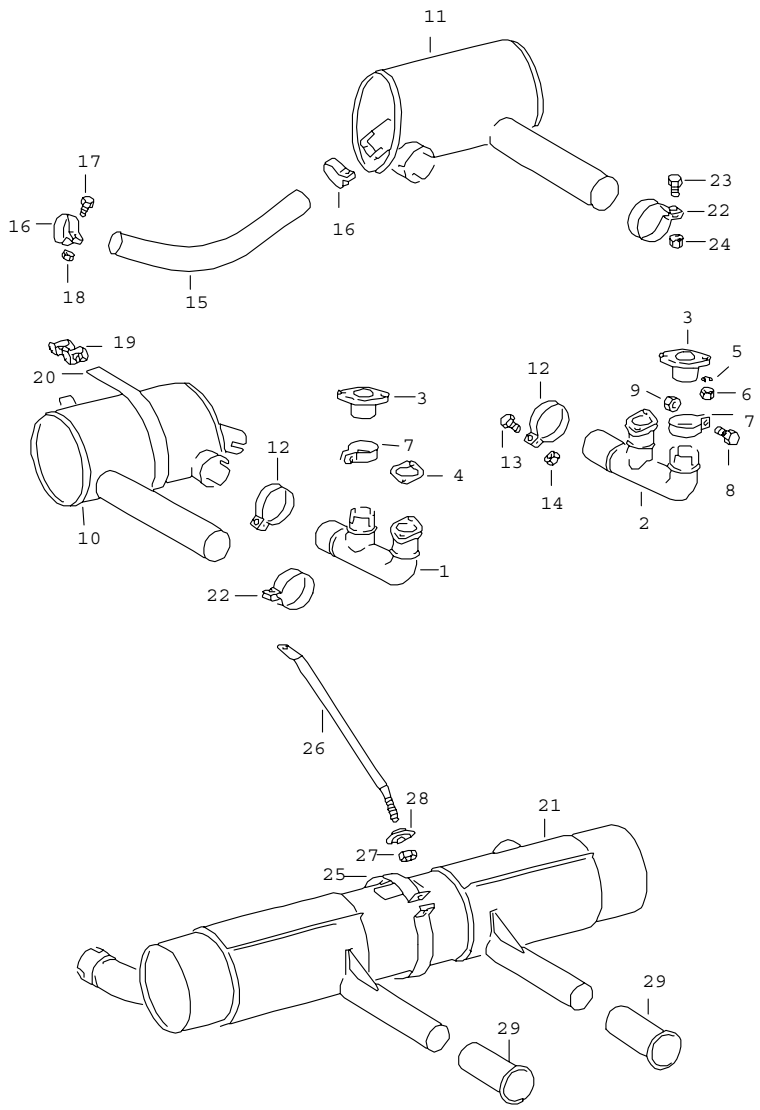

Pos	Part Number	Name	Remarks	Qty	Model
		exhaust system			CARRERA 692/3/3A
1	E 692 111 027 00	elbow double flange		1	
2	E 692 111 028 00	elbow double flange		1	
3	E 692 111 023 00	flange socket		2	
4	E PCG 111 210 00	gasket		4	
5	900 027 015 02	lock ring B 8		8	
6	E 547 54 221	hexagon nut		8	
7	616 111 255 01	clip		2	
8	900 075 029 02	hexagon-head bolt M 8 X 25		2 2	
9	E 547 54 221	hexagon nut		2	
10	E 692 111 015 00	front muffler	/L	1	
11	E 692 111 016 00	front muffler	/R	1	
12	E 999 511 033 01	clip		1	
(12)	E 999 165 001 02	clip		1	
13	900 075 029 02	hexagon-head bolt M 8 X 25		2	
14	E 547 54 221	hexagon nut		2	
15	E 692 111 121 00	pipe		1	
16	E 999 512 015 02	clip		2	
17	900 075 026 02	hexagon-head bolt M 8 X 18		2	
18	E 547 54 221	hexagon nut		2	
19	999 512 004 02	connecting piece		2	
20	E 999 512 005 02	restraining strap 25 X 700		2 2	
21	E 692 111 013 00	exhaust silencer		1	
22	900 165 002 02	clip		2	

Pos	Part Number	Name	Remarks	Qty	Model	Pos	Part Number	Name	Remarks	Qty	Model
23	900 075 029 02	hexagon-head bolt M 8 X 25		2							
24	E 547 54 221	hexagon nut		2							
25	E 999 511 031 02	restraining strap		1							
26	E 692 111 053 01	strut	/L	1							
(26)	E 692 111 054 01	strut	/R	1							
27	999 084 002 02	hexagon nut		2							
28	539 09 201	protection cap		2							
29	E 547 54 110	cover tail pipe		2							
		- -- E N D -- -									

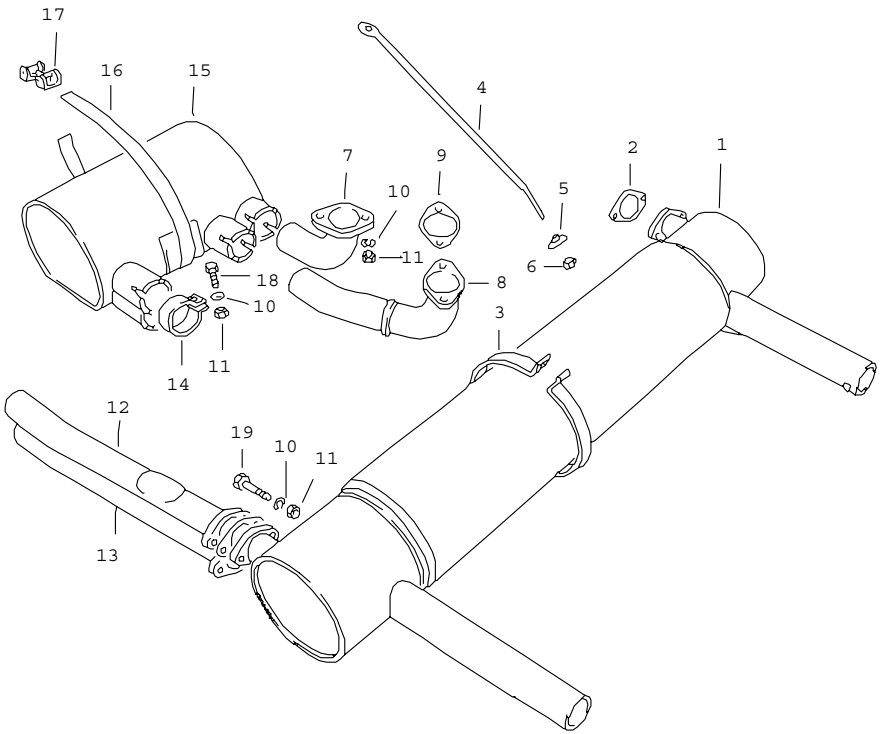

Pos	Part Number	Name	Remarks	Qty	Model
		exhaust system sport version retainer NR. 1			CARRERA 692/3A
1	E 692 111 017 00	exhaust silencer NR. 1		1	
2	E PCG 111 210 00	gasket		4	
3	999 511 025 02	restraining strap		2	
4	E 692 111 053 01	strut	/L	1	
(4)	E 692 111 054 01	strut	/R	1	
5	539 09 201	cap		2	
6	999 084 002 02	hexagon nut M 10 SW 17		4	
7	E 692 111 037 00	elbow III		1	
(7)	E 692 111 035 00	elbow I		1	
8	E 692 111 038 00	elbow IV		1	
(8)	E 692 111 036 00	elbow II		1	
9	E PCG 111 210 00	gasket		4	
10	900 027 015 02	lock ring B 8		24	
11	E 547 54 221	hexagon nut		24	
12	E 692 111 041 00	connecting tube III upper left		1	
(12)	E 692 111 040 00	connecting tube II upper right		1	
13	E 692 111 039 00	connecting tube I left lower		1	
(13)	E 692 111 042 00	connecting tube right lower		1	

Pos	Part Number	Name	Remarks	Qty	Model	Pos	Part Number	Name	Remarks	Qty	Model
14	E 900 165 001 03	clip 45,5		8							
15	E 692 111 015 01	front muffler	/L	1							
(15)	E 692 111 016 01	front muffler	/R	1							
16	E 999 512 005 02	restraining strap 25X700 P 951.611		2							
17	999 512 004 02	connecting piece		2							
18	900 075 029 02	hexagon-head bolt M 8X25		8							
19	900 075 099 02	hexagon-head bolt M 8X30		8							
		- -- E N D -- -									

Model	Year	MG	SG	Illustration	Restrictions	Update			
356	65	2	02	202-07		194	13:04	27.10.2005	PORSCHE PET PORSCHE

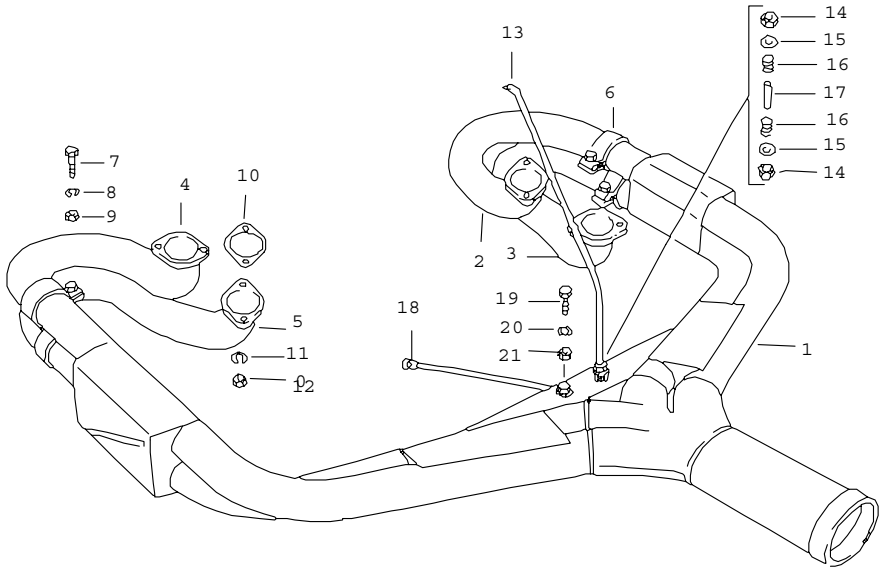

Pos	Part Number	Name	Remarks	Qty	Model
		exhaust system sport version			CARRERA 587/2
-	PCG 111 587 00	exhaust system complete without mounting parts		1	
1	E 587 111 013 00	retainer		1	
2	E 587 111 031 00	elbow cylinder 1		1	
3	E 587 111 032 00	elbow cylinder 2		1	
4	E 587 111 033 00	elbow cylinder 3		1	
5	E 587 111 034 00	elbow cylinder 4		1	
6	E 900 165 003 03	clip 48,5		4	
7	999 093 010 02	hexagon-head bolt M 8X20		4	
8	900 027 015 02	lock ring B 8		4	
9	E 547 54 221	hexagon nut		4	
10	692 111 931 01	gasket		4	
11	900 027 015 02	lock ring B 8		8	
12	E 547 54 221	hexagon nut		8	
13	E 587 111 053 00	strut I		1	
14	999 084 002 02	hexagon nut M 10		2	
15	E 692 111 531 00	concave washer		2	
16	E 547 05 215	valve spring		2	
17	E 692 111 533 00	guide sleeve		1	
18	E 587 111 524 00	strut II		1	

Pos	Part Number	Name	Remarks	Qty	Model	Pos	Part Number	Name	Remarks	Qty	Model
19	999 093 010 02	hexagon-head bolt M 8X20		1							
20	900 027 015 02	lock ring B 8		1							
21	E 547 54 221	hexagon nut		1							
		- -- E N D -- -									

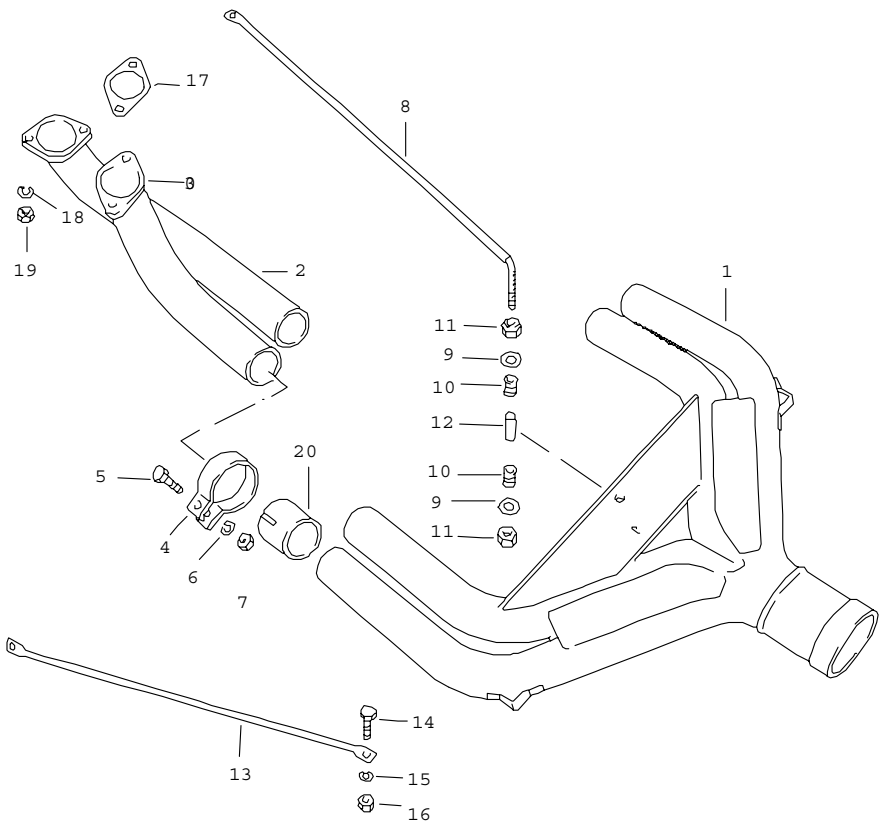

Pos	Part Number	Name	Remarks	Qty	Model
		exhaust system sport version			CARRERA 692/3A
-	PCG 111 692 00	exhaust system complete without mounting parts		1	
2	E 692 111 033 00	elbow III		1	
(2)	E 692 111 031 00	elbow I		1	
3	E 692 111 034 00	elbow IV		1	
(3)	E 692 111 032 00	elbow II		1	
4	616 111 255 01	clip		4	
5	999 093 010 02	hexagon-head bolt M 8X20		4	
6	900 027 015 02	lock ring B 8		4	
7	E 547 54 221	hexagon nut		4	
8	E 692 111 056 00	strut		1	
9	E 692 111 531 00	concave washer		2	
10	E 547 05 215	valve spring		2	
11	999 084 002 02	hexagon nut		2	
12	E 692 111 533 00	guide sleeve		1	
13	E 692 111 524 00	strut		1	
14	999 093 010 02	hexagon-head bolt M 8X20		1	
15	900 027 015 02	lock ring B 8		1	
16	900 076 013 02	hexagon nut M 8		1	
17	E PCG 111 210 00	gasket		4	
18	900 027 015 02	lock ring B 8		8	
19	E 547 54 221	hexagon nut		8	

Pos	Part Number	Name	Remarks	Qty	Model	Pos	Part Number	Name	Remarks	Qty	Model
-	900 025 007 02	washer		8							
20	-	not available									
		- -- E N D -- -									

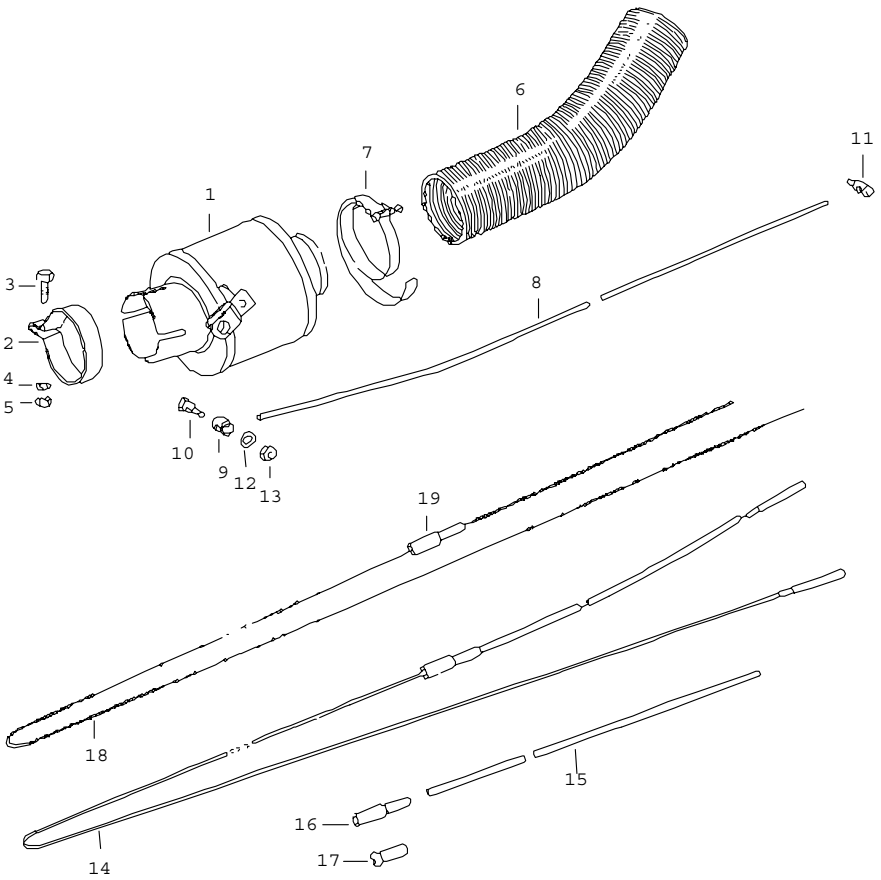

Pos	Part Number	Name	Remarks	Qty	Model
		GUMMIH heating air supply			356 B/C
1	644 211 025 05	heat control box F >> 122 850 F >> 212 600 F >> 157 750	/L	1	COUPE -REUTTER- COUPE -KARMANN- CABRIO HARDTOP
(1)	644 211 026 05	heat control box F >> 122 850 F >> 212 600 F >> 157 750	/R	1	COUPE -REUTTER- COUPE -KARMANN- CABRIO HARDTOP
2	644 211 251 00	clip F >> 122 850 F >> 212 600 F >> 157 750		2	COUPE -REUTTER- COUPE -KARMANN- CABRIO HARDTOP
3	900 074 014 01	hexagon-head bolt M 6 X 25 F >> 122 850 F >> 212 600 F >> 157 750		2	COUPE -REUTTER- COUPE -KARMANN- CABRIO HARDTOP
4	N 012 007 2	lock ring A 6 F >> 122 850 F >> 212 600 F >> 157 750		2	COUPE -REUTTER- COUPE -KARMANN- CABRIO HARDTOP
5	900 076 010 02	hexagon nut M 6 F >> 122 850 F >> 212 600 F >> 157 750		2	COUPE -REUTTER- COUPE -KARMANN- CABRIO HARDTOP

Pos	Part Number	Name	Remarks	Qty	Model
6	644 211 921 05	hose		2	
		F >> 122 850			COUPE -REUTTER-
		F >> 212 600			COUPE -KARMANN-
		F >> 157 750			CABRIO HARDTOP
7	999 512 104 02	hose clamp 9 X 425		4	
		F >> 122 850			COUPE -REUTTER-
		F >> 212 600			COUPE -KARMANN-
		F >> 157 750			CABRIO HARDTOP
8	644 211 701 00	operating rod	/L	1	
(8)	644 211 702 00	operating rod	/R	1	
9	644 211 751 00	bush		6	
10	644 211 755 00	screw		3	
11	644 211 755 01	screw		3	
12	N 012 226 5	spring washer B 6		6	
13	900 076 010 02	hexagon nut M 6		6	
14	695 424 071 00	wire pull for heat control box		1	356 B
14	695 424 071 00	traction for heat control box not for (D)(S)		1	356 C
15	E 356 24 409	insulating hose 520 MM		1	356 B
		F >> 110 406	-		COUPE -REUTTER-
		F >> 153 022			CABRIO HARDTOP
		F >> 87 491			ROADSTER
15	E 695 424 711 00	insulating hose 464 MM		1	356 B
		F 110 407 >>			COUPE -REUTTER-
		F 153 023 >>			CABRIO HARDTOP
		F 87 492 >>			ROADSTER
15	E 695 424 711 01	insulating hose "S" 6,5 X 544 MM		1	356 C
16	E 356 24 408	gasket		1	356 B
16	E 356 24 408	gasket not for (S)		2	356 C
17	E 999 703 001 40	plug		1	356 B
		F 117 601 >>			COUPE -REUTTER
		F 155 601 >>			CABRIO HARDTOP
		F 89 601 >>			ROADSTER
17	E 999 703 001 40	plug		2	CARRERA 2
18	695 424 071 00	wire pull for heat control box		1	356 C (D)(S)
19	E 356 24 402 2	gasket		2	356 C (D)(S)

- -- E N D -- -

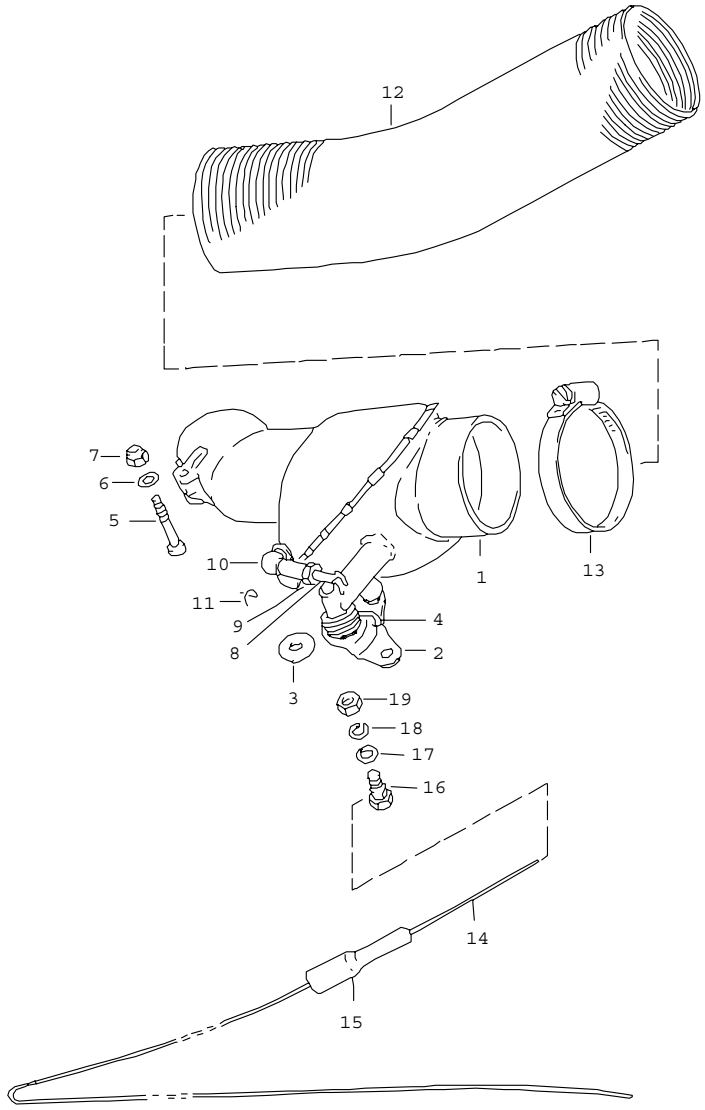

Pos	Part Number	Name	Remarks	Qty	Model
		heating air supply valid for F 122 851 >> F 212 601 >> F 157 751 >>			COUPE -REUTTER- COUPE -KARMANN- CABRIO HARDTOP
(1)	644 211 007 07	flap	/L	1	
1	644 211 008 07	flap	/R	1	
(2)	E 644 211 039 06	bracket	/L	1	
2	E 644 211 040 06	bracket	/R	1	
3	900 089 005 02	washer 6,4		2	
-	900 021 003 02	cotter pin 1,6 X 12		2	
4	--- --- --- --	deleted		2	
-	E 644 211 237 00	tension spring		2	
-	644 211 251 07	clip		2	
5	E 900 074 012 02	hexagon-head bolt M 6 X 20		2	
6	900 027 014 01	lock ring B 6		2	
7	900 076 010 02	hexagon nut M 6		2	
8	E 644 211 235 06	connecting piece		2	
9	900 076 006 02	hexagon nut M 5		4	
10	999 169 002 02	ball socket A 8		4	
11	900 169 014 02	securing clip S 8		4	
12	E 644 211 921 06	heater hose		2	
13	999 512 124 02	hose clamp		4	
14	695 424 701 01	wire pull for heat control box		1	
15	E 356 24 402 2	gasket		2	

Pos	Part Number	Name	Remarks	Qty	Model	Pos	Part Number	Name	Remarks	Qty	Model
16	901 211 683 00	clamping screw		2							
17	900 025 002 02	washer		4							
18	900 027 011 01	lock ring B 4		2							
19	N 011 004 6	hexagon nut M 4		2							
		- -- E N D -- -									

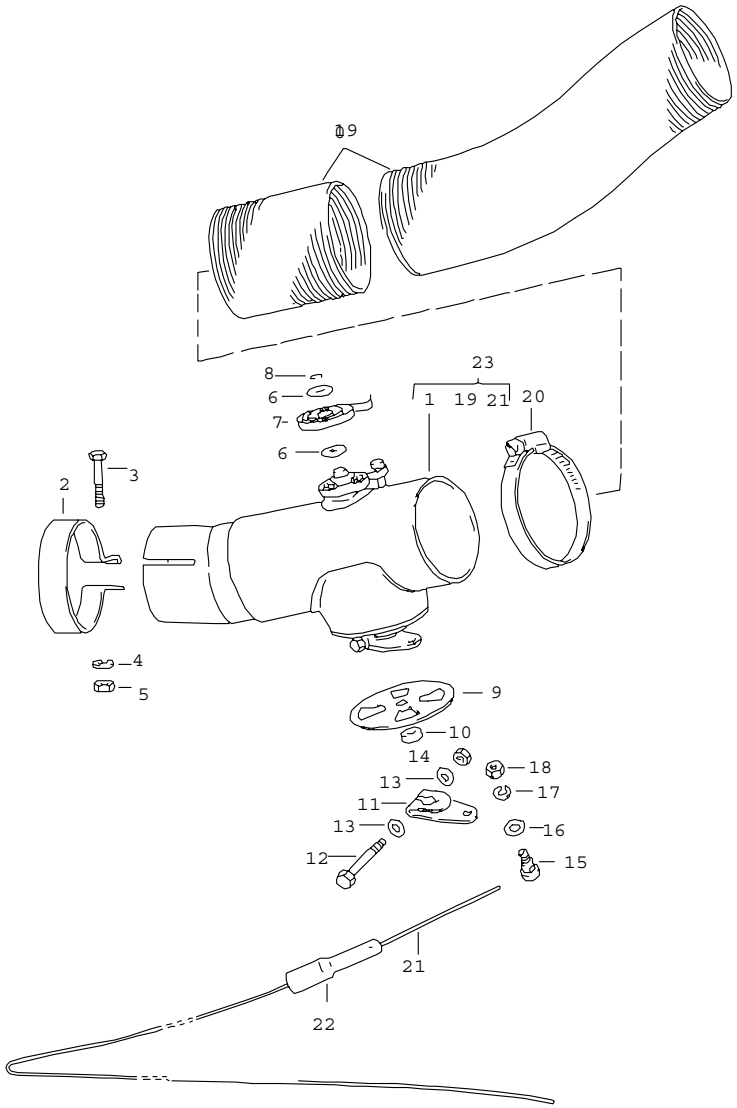

Pos	Part Number	Name	Remarks	Qty	Model
		heating air supply	JULI 64-		(D)(S)
1	644 211 007 07	heat control box	/L	1	
(1)	644 211 008 07	heat control box	/R	1	
2	644 211 251 07	clip		2	
3	E 900 074 012 02	hexagon-head bolt M 6 X 20		2	
4	900 027 014 01	lock ring B 6		2	
5	900 076 010 02	hexagon nut M 6		2	
6	900 089 006 02	washer 8		4	
7	644 211 231 07	spring		2	
8	E 999 116 004 00	retainer 8		2	
9	E 644 211 243 07	rotary slide		2	
10	E 644 211 271 07	gasket		2	
11	E 644 211 215 07	lever		2	
12	E 900 074 122 02	hexagon-head bolt M 5 X 30		2	
13	900 025 003 02	washer 5,3		4	
14	999 084 102 02	lock nut M 5		2	
15	901 211 683 00	clamping screw		2	
16	900 025 002 02	washer 4,3		2	
17	900 027 011 01	lock ring B 4		2	
18	N 011 004 6	hexagon nut M 4		2	
19	644 211 091 07	heater hose		2	
20	999 512 124 02	hose clamp		4	
21	901 424 701 05	wire pull for heat control box		1	

Pos	Part Number	Name	Remarks	Qty	Model
22	E 356 24 402 2	gasket		2	
23	E 644 211 950 00	reconstruction set heat control box		1	356 B-T6 356 C (D)(S)
		- -- E N D -- -			

Pos	Part Number	Name	Remarks	Qty	Model

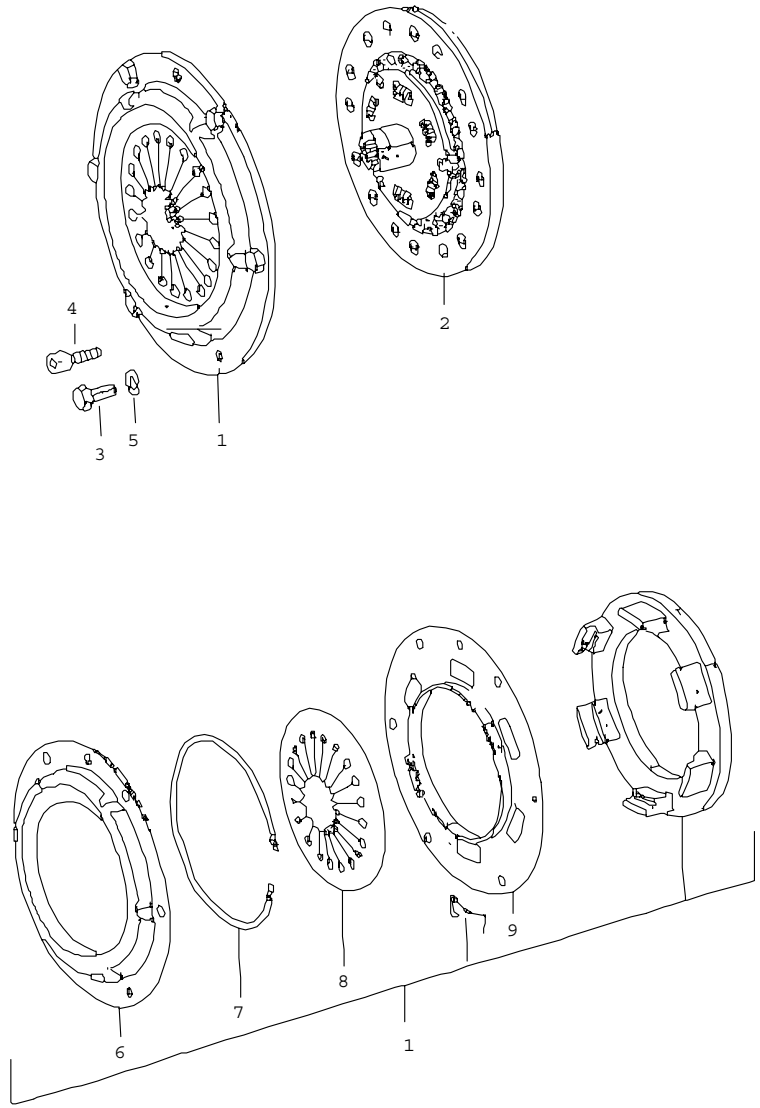

Pos	Part Number	Name	Remarks	Qty	Model
		clutch			
1	616 116 012 01	pressure plate M 180 K		1	356 B: 1600 /S 356 B-T5: 1600 S90
1	616 116 012 01	pressure plate M 180 K		1	356 B: 1600 /S 356 B-T5: 1600 S90
1	616 116 014 02	pressure plate M 200 K		1	356 B-T6: 1600 S90 1600 C/SC
1	616 116 014 02	pressure plate M 200K		1	356 B-T6: 1600 S90
1	E 587 116 011 00	pressure plate		1	587/2
1	E 692 116 012 00	pressure plate		1	587/1 692/3A
1	E 692 116 011 01	pressure plate		1	692/3
2	616 116 013 00	drive plate $ 180 MM		1	356 B: 1600 /S 356 B-T5: 1600 S90
2	692 116 016 01	clutch plate $ 200 MM		1	356 B-T6: 1600 S90 1600 C/SC 587/1/692/3A
2	E 587 116 010 01	drive plate		1	587/2
2	E 692 116 015 00	drive plate $ 180 MM		1	692/3
3	999 093 010 02	hexagon-head bolt M 8 X 20		6	587/1/2 356 B-T5 692/3/3A
4	900 067 057 02	pan-head screw M 8 X 20		6	356 B-T6 356 C
5	900 028 010 01	spring washer B 8		6	
6	616 116 125 01	cover for pressure plate $ 180 MM		1	356 B: 1600 /S 256 B-T5: 1600 S90 692/3

Pos	Part Number	Name	Remarks	Qty	Model
6	E 616 116 157 00	cover for pressure plate $ 200 MM		1	356 B-T6: 1600 S90 1600 C/SC
6	E 692 116 157 00	cover		1	587/1/692/3A
6	E 587 116 157 00	cover		1	587/2
7	616 116 181 00	snap ring		1	356 B: 1600 /S 356 B-T5: 1600 S90 692/3
7	E 692 116 191 00	snap ring		1	356 B-T6: 1600 S90 1600 C/SC 587/1/2 692/3A
8	692 116 132 00	cup spring		1	356 B: 1600 /S 356 B-T5: 1600 S90 692/3
8	692 116 133 00	cup spring		1	356 B-T6 1600 S90 1600 C/SC 587/1/2 692/3A
9	616 116 115 01	plate for pressure plate $ 180 MM		1	356 B: 1600 /S 356 B-T5: 1600 S90 692/3
9	E 692 116 155 00	plate for pressure plate $ 200 MM		1	692/A3
9	E 616 116 155 01	plate for pressure plate $ 200 MM		1	356 B-T6: 1600 S90 1600 C/SC 587/1/2
-	E 692 101 192 00	intermediate flange		1	587/1/2
		- -- E N D -- -			

Model	Year	MG	SG	Illustration	Restrictions	Update			
356	65	3	01	301-05		194	13:06	27.10.2005	PORSCHE PET PORSCHE

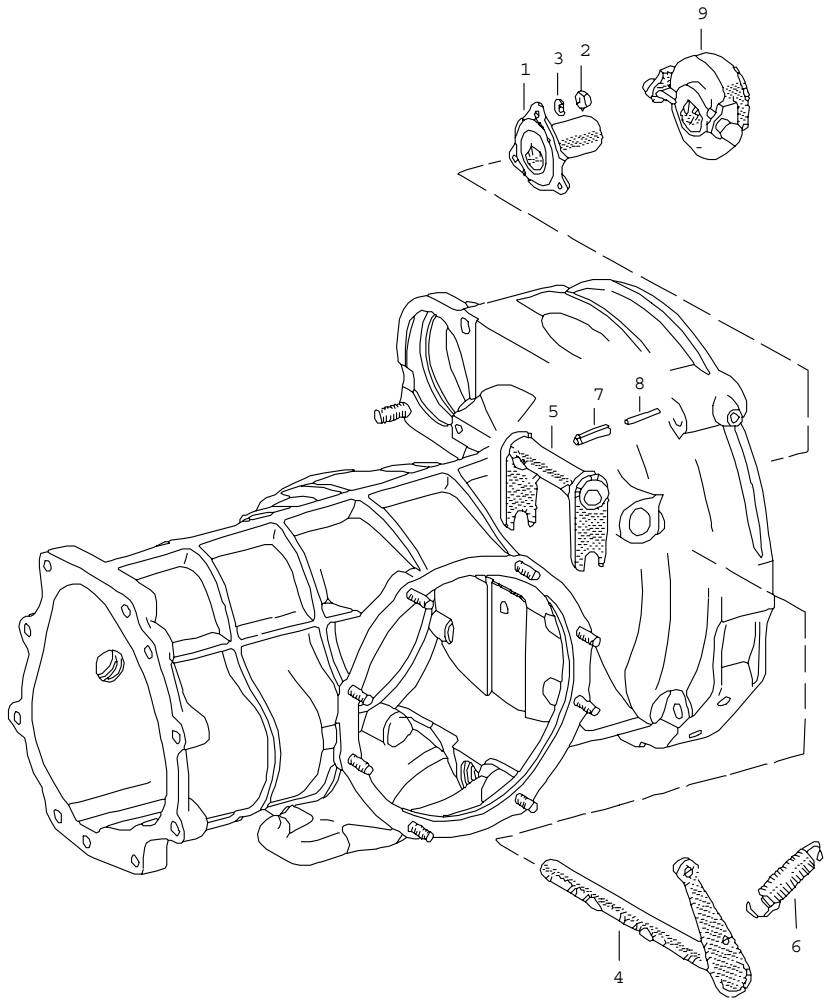

Pos	Part Number	Name	Remarks	Qty	Model
		clutch release			
1	741 116 087 01	guide tube clutch release bearing		1	356 B
(1)	741 116 087 01	guide tube clutch release bearing		1	356 C
2	900 076 010 02	hexagon nut M 6		3	
3	900 027 013 01	lock ring B 6		3	356 B
3	900 027 014 01	lock ring B 6		3	356 C
4	741 116 071 00	clutch lever shaft		1	
5	741 116 073 00	release fork		1	
6	999 522 005 01	tension spring		1	
7	N 013 288 1	guide sleeve 6 X 24		2	
8	900 095 010 00	roll pin 3,5 X 24		2	
9	741 116 081 00	clutch release bearing		1	356 B
(9)	901 116 081 01	clutch release bearing not for - CARRERA -		1	356 C
		- -- E N D -- -			

Model	Year	MG	SG	Illustration	Restrictions	Update	13:06	27.10.2005	PORSCHE PET PORSCHE
356	65	3	02	302-00		194			

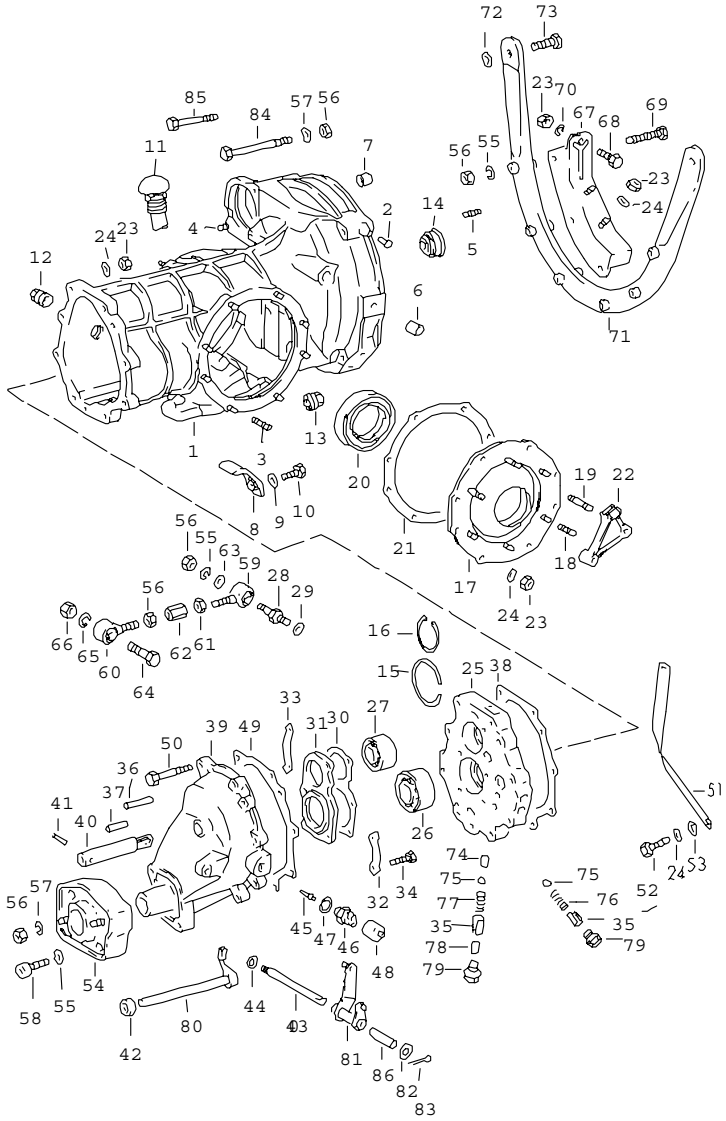

Pos	Part Number	Name	Remarks	Qty	Model
		transmission case with transmission suspension			
1	741 301 010 00	transmission case complete		1	356 B-T5
(1)	741 301 010 10	transmission case complete		1	356 B-T6 356 C
2	E 900 093 005 02	grooved nail 6 X 20		1	
3	000 95 138	stud		16	
4	E 900 061 014 02	stud BM 10 X 22		1	
5	E 999 062 001 02	stud BM 6 X 10		3	
6	644 20 117	bearing sleeve clutch lever shaft		2	
7	644 09 401	bearing sleeve starter shaft		1	
8	519 20 133	baffle plate		1	
9	519 20 135	lock washer copper		1	
10	900 075 028 02	hexagon-head bolt M 8 X 22		1	
11	519 20 012	bleeder		1	
12	999 064 019 02	screw plug		1	
13	999 064 020 02	screw plug with magnet		1	
14	999 113 048 50	sealing ring drive shaft		1	
15	E 644 20 105	snap ring		1	
16	N 012 290 2	circlip 52 X 2		2	356 B
16	E 999 042 004 01	circlip 3 MM from transmission number 76 406 up to transmission number 77 651		1	356 C

Pos	Part Number	Name	Remarks	Qty	Model
16	741 301 181 00	circlip 3 MM from transmission number 76 406 up to transmission number 77 651		1	356 C
(16)	N 012 290 2	circlip from transmission number 77 652		2	356 C
17	E 644 20 011 1	housing cover	/L	1	
(17)	644 20 011	housing cover	/R	1	
18	000 95 135	stud		10	
19	999 062 010 02	stud BM 8 X 35		2	
20	E 900 053 004 00	angular-contact bearing 7210		1	
(20)	900 052 005 00	deep-groove ball bearing 6210		1	
21	644 20 116	gasket		2	
22	644 23 327	retaining bracket clutch cable		1	
23	900 076 025 02	hexagon nut M 8		16	356 B
23	900 076 025 02	hexagon nut M 8		54	356 C
24	N 012 241 8	spring washer B 8		16	356 B
24	N 012 241 8	spring washer B 8		52	356 C
25	E 741 301 221 00	intermediate plate F >> 110 406 F >> 153 022 F >> 87 491 up to transmission number 35 000 B = from transmission number 35 001		1	COUPE -REUTER CABRIO HARDTOP ROADSTER
26	900 053 003 00	angular-contact bearing 3305		1	
27	900 053 002 00	angular-contact bearing 3304		1	
28	741 305 511 00	bolt control arm F >> 110 406 F >> 153 022 F >> 87 491 up to transmission number 35 000 B = from transmission number 35 001		1	COUPE -REUTER CABRIO HARDTOP ROADSTER
29	900 028 014 02	spring washer B 12 F >> 110 406 F >> 153 022 F >> 87 491 up to transmission number 35 000 B = from transmission number 35 001		1	COUPE -REUTER CABRIO HARDTOP ROADSTER
30	644 20 122	shim		X	
31	644 20 118	tensioning plate		1	
32	741 301 291 00	tab washer	/L	1	
33	741 301 292 00	tab washer	/R	1	
34	900 074 034 01	hexagon-head bolt M 8 X 30		4	741/0-741/3 741/8,741/0A 741/2A, 741/80A
(34)	E 999 074 003 01	hexagon-head bolt		4	741/4-741/7
(34)	900 074 035 02	hexagon-head bolt M 8 X 32		1	741/0-741/8 741/0A 741/2A 741/80A
(34)	900 074 032 00	hexagon-head bolt M 8 X 25		5	741/20A 741/8A
-	900 076 013 02	hexagon nut M 8		1	741/0-741/8
-	900 076 013 02	hexagon nut M 8		1	741/0A 741/2A 741/80A

Pos	Part Number	Name	Remarks	Qty	Model
-	999 039 001 00	tab washer		1	
35	E 644 20 108	bush gear lock detent		3	
36	900 012 020 00	pin 8 M 6 X 45		1	
37	E 900 012 017 00	pin 8 M 6 X 28		2	
38	644 20 109	shim 0,10 MM		X	
(38)	644 20 110	shim 0,15 MM		X	
(38)	644 20 111	shim 0,20 MM		X	
39	E 741 301 301 02	transmission cover F >> 110 406 F >> 153 022 F >> 87 491 up to transmission number 35 000 B = from transmission number 35 001	/V	1	COUPE -REUTER CABRIO HARDTOP ROADSTER
40	644 20 022	bolt reverse idler gear		1	
(40)	E 741 302 220 00	bolt reverse idler gear from transmission number 60 862		1	741/20A 741/8A 741/9A
41	900 095 018 00	roll pin 5 X 28		1	
42	900 112 001 50	shaft seal A 15 X 24		1	
43	695 301 307 00	bolt reverse lever		1	
44	N 012 241 8	spring washer B 8		1	
45	E 741 303 017 00	cam follower back-up light switch		1	
-	N 012 432 1	lock washer 2,3		1	
46	914 613 541 02	back-up light switch		1	356 B
(46)	914 613 541 02	back-up light switch with rubber cap		1	356 C
47	900 123 009 20	sealing ring A 18 X 24		1	
48	914 613 491 00	rubber cap		1	
49	741 301 911 00	shim		1	
50	900 074 044 02	hexagon-head bolt M 8 X 70 F >> 110 406 F >> 153 022 F >> 87 491 up to transmission number 35 000 B = from transmission number 35 001		7	COUPE -REUTER CABRIO HARDTOP ROADSTER
(50)	N 010 375 4	hexagon-head bolt M 8 X 75		1	
51	999 611 918 20	ground strap		1	
23	900 076 025 02	hexagon nut M 8		8	
24	N 012 241 8	spring washer B 8		8	
24	N 012 241 8	spring washer B 8		1	
52	999 093 010 02	hexagon-head bolt M 8 X 20		1	
53	999 151 022 02	washer 8,4 ground strap		1	
54	E 741 305 021 00	transmission suspension F >> 110 406 F >> 153 022 F >> 87 491 up to transmission number 35 000 B = from transmission number 35 001	/V	1	COUPE -REUTER CABRIO HARDTOP ROADSTER

Pos	Part Number	Name	Remarks	Qty	Model
55	900 027 016 02	lock ring B 10 F >> 110 406 F >> 153 022 F >> 87 491 up to transmission number 35 000 B = from transmission number 35 001		2	COUPE -REUTER CABRIO HARDTOP ROADSTER
56	N 011 010 6	hexagon nut M 10 F >> 110 406 F >> 153 022 F >> 87 491 up to transmission number 35 000 B = from transmission number 35 001		2	COUPE -REUTER CABRIO HARDTOP ROADSTER
57	900 028 012 00	spring washer A 10 F >> 110 406 F >> 153 022 F >> 87 491 up to transmission number 35 000 B = from transmission number 35 001		2	COUPE -REUTER CABRIO HARDTOP ROADSTER
58	E 900 067 022 00	hexagon socket head bolt M 10 X 25 F >> 110 406 F >> 153 022 F >> 87 491 up to transmission number 35 000 B = from transmission number 35 001		2	COUPE -REUTER CABRIO HARDTOP ROADSTER
59	741 305 507 00	swivel head left thread F >> 110 406 F >> 153 022 F >> 87 491 up to transmission number 35 000 B = from transmission number 35 001		1	COUPE -REUTER CABRIO HARDTOP ROADSTER
60	741 305 508 00	swivel head right thread F >> 110 406 F >> 153 022 F >> 87 491 up to transmission number 35 000 B = from transmission number 35 001		1	COUPE -REUTER CABRIO HARDTOP ROADSTER
61	900 157 003 02	hexagon nut M 10 left thread F >> 110 406 F >> 153 022 F >> 87 491 up to transmission number 35 000 B = from transmission number 35 001		1	COUPE -REUTER CABRIO HARDTOP ROADSTER
62	741 305 509 00	adjusting nut F >> 110 406 F >> 153 022 F >> 87 491 up to transmission number 35 000 B = from transmission number 35 001		1	COUPE -REUTER CABRIO HARDTOP ROADSTER

Pos	Part Number	Name	Remarks	Qty	Model
56	900 157 002 02	hexagon nut M 10 F >> 110 406 F >> 153 022 F >> 87 491 up to transmission number 35 000 B = from transmission number 35 001		1	COUPE -REUTER CABRIO HARDTOP ROADSTER
63	900 025 008 00	washer 10,5 F >> 110 406 F >> 153 022 F >> 87 491 up to transmission number 35 000 B = from transmission number 35 001		1	COUPE -REUTER CABRIO HARDTOP ROADSTER
55	900 027 016 02	lock ring B 10 F >> 110 406 F >> 153 022 F >> 87 491 up to transmission number 35 000 B = from transmission number 35 001		1	COUPE -REUTER CABRIO HARDTOP ROADSTER
56	E 900 078 002 00	hexagon nut M 10 F >> 110 406 F >> 153 022 F >> 87 491 up to transmission number 35 000 B = from transmission number 35 001		1	COUPE -REUTER CABRIO HARDTOP ROADSTER
64	E 900 082 008 00	hexagon-head bolt M 12 X 1,5 X 50 mount cross tube F >> 110 406 F >> 153 022 F >> 87 491 up to transmission number 35 000 B = from transmission number 35 001		1	COUPE -REUTER CABRIO HARDTOP ROADSTER
65	900 027 017 02	lock ring B 12 F >> 110 406 F >> 153 022 F >> 87 491 up to transmission number 35 000 B = from transmission number 35 001		1	COUPE -REUTER CABRIO HARDTOP ROADSTER
66	E 900 076 016 00	hexagon nut M 12 X 1,5 F >> 110 406 F >> 153 022 F >> 87 491 up to transmission number 35 000 B = from transmission number 35 001		1	COUPE -REUTER CABRIO HARDTOP ROADSTER
(67)	519 20 095	rubber mounting	/L	1	
67	519 20 096	rubber mounting	/R	1	
(67)	E 741 305 025 00	rubber mounting	/L	1	CARRERA 2000
(67)	E 741 305 026 00	rubber mounting	/R	1	CARRERA 2000
68	999 093 010 02	hexagon-head bolt M 8 X 20		2	
69	900 075 046 01	hexagon-head bolt M 10 X 55		6 4	741/20A 741/8A
(69)	900 074 064 02	hexagon-head bolt M 10 X 60		2	741/20A 741/8A

Pos	Part Number	Name	Remarks	Qty	Model
70	900 027 015 02	lock ring B 8		2	
55	900 027 016 02	lock ring B 10		6	
56	N 011 010 6	hexagon nut M 10		6	
24	N 012 241 8	spring washer B 8		4	
23	900 076 025 02	hexagon nut M 8		6	
71	E 519 20 545	transmission carrier		1	
72	900 028 014 02	spring washer B 12		2	
73	900 082 006 02	hexagon-head bolt M 12 X 1,5 X 30		2	
74	E 519 20 331	detent gear lock detent		2	
75	N 025 667 2	ball 9 MM gear lock detent		3	
76	E 519 20 265	spring gear lock detent		2	
77	519 20 330	spring gear lock detent		1	
78	E 900 012 038 00	straight pin 10 H 11 X 14		1	
79	E 999 065 001 02	screw plug		3	
80	741 303 016 00	shift lever F >> 110 406 F >> 153 022 F >> 87 491 up to transmission number 35 000 B = from transmission number 35 001		1	COUPE -REUTER CABRIO HARDTOP ROADSTER
81	E 695 423 021 00	reverse lever F >> 110 406 F >> 153 022 F >> 87 491 up to transmission number 35 000 B = from transmission number 35 001		1	COUPE -REUTER CABRIO HARDTOP ROADSTER
82	900 025 008 02	washer 10,5		1	
83	N 012 530 1	cotter pin 3 X 15		1	
84	N 010 500 3	hexagon-head bolt M 10 X 110 for engine mount		1	
85	E 900 074 065 02	hexagon-head bolt M 10 X 70 for engine mount		1	
57	900 028 012 00	spring washer B 10		4	
56	N 011 010 6	hexagon nut M 10		4	
86	914 423 211 00	bush reverse lever		2	

- -- E N D -- -

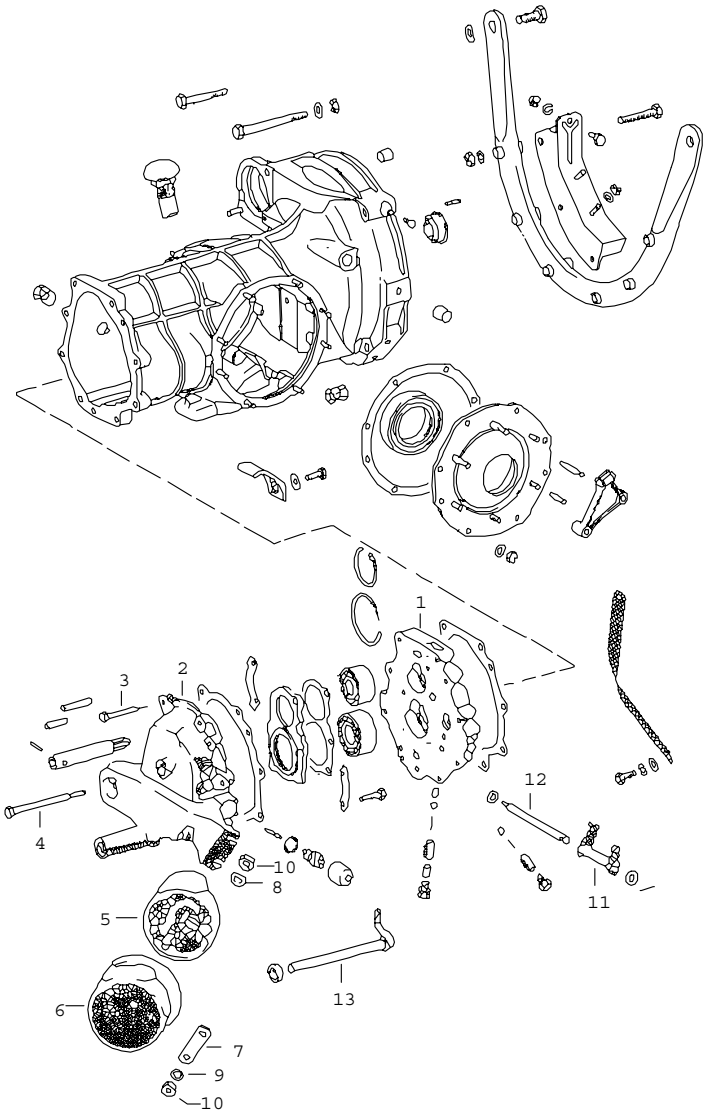

Pos	Part Number	Name	Remarks	Qty	Model
		transmission cover intermediate plate			
		parts not listed see group 3/02/00			
1	741 301 221 01	intermediate plate aluminium		1	
(1)	E 741 301 221 10	intermediate plate grey cast iron		1	741/20 A 741/8 A
2	E 741 301 301 03	transmission cover	/V	1	
3	900 074 044 02	hexagon-head bolt M 8 X 70		5	
(3)	N 010 375 4	hexagon-head bolt M 8 X 75		1	
4	900 074 050 02	hexagon-head bolt M 8 X 120		2	
5	519 20 016	bonded rubber mounting soft	A,	2	
(5)	519 20 016	bearing hard		2	CARRERA
6	E 644 20 505	retainer		2	
7	519 20 539	reinforcement plate		4	
8	N 012 230 1	spring washer B 10		4	
9	900 027 016 02	lock ring B 10		4	
10	N 011 010 6	hexagon nut M 10		8	
11	E 695 423 021 01	reverse lever		1	741/0-741/8 741/20A 741/8A
11	901 423 027 02	lever		1	741/0A 741/2A 741/80A
12	914 301 307 00	bolt		1	
13	741 303 016 01	shift lever		1	
		- -- E N D -- -			

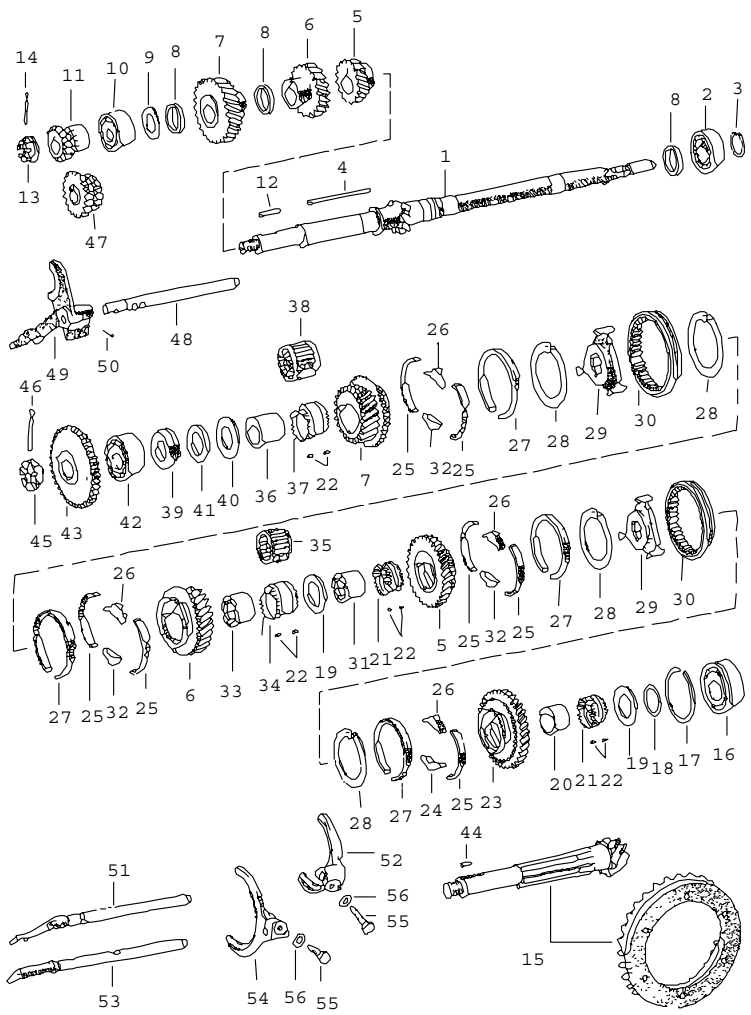

Pos	Part Number	Name	Remarks	Qty	Model
		GANG transmission gears and shafts			
1	E 519 20 249	drive shaft Z = 11		1	356 B-T5: 741/0-741/6 741/8
(1)	E 741 302 101 00	drive shaft Z = 12		1	356 B-T5: 741/7
(1)	741 302 101 10	drive shaft Z = 11		1	356 B-T6 356 C
2	644 20 207	cylindrical-roller bearing		1	
3	999 041 003 01	circlip		1	
4	900 117 009 00	key A 6 X 4 X 80		1	356 B-T5: 741/0-741/8 356 B-T6 356 C: 741/0A/2A 741/80A
(4)	E 900 117 031 00	key A 6 X 4 X 80		1	356 B-T6 356 C: 741/8A/9A 741/20A CARRERA
-	E 741 302 911 21	gear set 1st gear Z = 12:33 (1C)		1	741/9A
5	E 716 302 902 01	gear set 2nd gear Z = 16:31 (2A)		1	741/3-741/5 741/9A
(5)	716 302 902 11	gear set 2nd gear Z = 17:30 (2B)		1	741/0-741/2 741/8A
(5)	E 741 302 902 20	gear set 2nd gear Z = 15:32 (2C)		1	741/6/9A
(5)	E 741 302 902 30	gear set 2nd gear Z = 18:29 (2D)		1	741/7/9A
6	741 302 903 00	gear set 3rd speed Z = 22:27 (3A)		1	741/1/7/8/8A 741/80A

Pos	Part Number	Name	Remarks	Qty	Model
(6)	716 302 903 11	gear set 3rd speed Z = 23:26 (3B) G >> 33 391		1	741/0/2
(6)	741 302 903 10	gear set 3rd speed Z = 23:26 (3B) G 33 392 >>		1	741/0/2 741/8A/9A 741/20A
(6)	741 302 903 30	gear set 3rd speed Z = 19:28 (3D)		1	741/9A
(6)	741 302 903 40	gear set 3rd speed Z = 20:27 (3E)		1	741/3-741/5 741/9A
(6)	E 741 302 903 50	gear set 3rd speed Z = 18:29 (3F)		1	741/6/9A
7	741 302 904 00	gear set 4th speed Z = 25:24 (4A)		1	741/1/3/9A
(7)	716 302 904 21	gear set 4th speed Z = 27:22 (4C) G >> 33 391		1	741/0
(7)	741 302 904 20	gear set 4th speed Z = 27:22 (4C) G 33 392 >>		1	741/0/0A/9A
(7)	741 302 904 30	gear set 4th speed Z = 27:23 (4D)		1	741/2/2A/9A 741/20A
(7)	E 741 302 905 20	gear set 4th speed Z = 24:25 (3C)		1	741/4
(7)	741 302 903 20	gear set 4th speed Z = 24:25 (3C)		1	741/7/9A
(7)	741 302 903 10	gear set 4th speed Z = 23:26 (3B)		1	741/5/8A/9A 741/80A
(7)	741 302 903 40	gear set 4th speed Z = 20:27 (3E)		1	741/6/9A

Pos	Part Number	Name	Remarks	Qty	Model
(7)	E 741 302 904 10	gear set 4th speed Z = 26:23 (4B)		1	741/8/8A/80A
8	E 716 302 265 00	spacer ring		2	356 B-T5: 741/3-741/7
8	741 302 296 00	spacer ring		1	356 B-T6 356 C
9	E 644 20 202	washer		1	
10	900 053 002 00	angular-contact bearing 3304		1	
11	644 20 203	reverse gear wheel 1		1	
12	900 117 018 00	key B 6 X 4 X 12		1	
13	519 20 285	castle nut		1	
14	N 012 533 1	cotter pin 3 X 28		1	
15	741 302 906 01	ring gear and pinion shaft 7:31		1	356 B-T5/T6 356 C
16	915 302 399 05	cylindrical-roller bearing		1	
17	900 111 001 00	snap ring SP 62 A		1	
18	741 302 297 00	adjusting shim 0,25 MM		X	
(18)	741 302 297 01	adjusting shim 0,30MM		X	
(18)	741 302 297 02	adjusting shim 0,40 MM		X	
19	519 20 216	thrust washer 1st/2nd gear		2	
20	519 20 217	bush 1st gear		1	
21	519 20 218	needle cage 1st/2nd gear		2	
22	716 302 930 00	roller 3 X 5 1. - 4. speed G >> 33 391		X	356 B-T5: 741/0-741/5

Pos	Part Number	Name	Remarks	Qty	Model
(22)	716 302 930 00	ZYLINDERROLLE 3 X 5 1st/2nd gear G 33 392 >>		X	356 B-T5: 741/0-741/8
-	E 716 302 930 02	roller 3 X 5 undersize 2		X	
-	E 716 302 930 04	roller 3 X 5 undersize 4		X	
-	E 716 302 930 20	roller 3 X 5 oversize 2		X	
-	E 716 302 930 40	roller 3 X 5 oversize 4		X	
(22)	716 302 930 00	roller 3 X 5 undersize oversize -4,-2,0,+2,+4 indicate		X	356 B-T6 356 C
23	E 716 302 021 11	gear wheel 1st gear Z = 34		1	356 B-T5: 741/0-741/6 741/8
(23)	E 741 302 021 20	gear wheel 1st gear Z = 33		1	356 B-T5: 741/7
(23)	741 302 021 10	gear wheel 1st gear		1	356 B-T6 356 C
24	716 302 320 01	stone 1st gear		1	
25	741 302 316 00	brake band 1. BIS 4. speed		7	
26	741 302 317 00	stop 1. BIS 4. speed		4	
27	716 302 301 06	synchroniser ring 1.BIS 4. speed		4	
28	741 302 311 00	circlip 1. BIS 4. speed		4	
29	716 302 401 01	guide sleeve		2	
30	716 302 411 01	shift sleeve		2	
31	E 519 20 297	bush needle cage 2nd gear		1	
32	716 302 315 02	stone 2. - 4. speed		3	
33	519 20 298	bush needle cage 3rd speed G >> 33 391		1	741/0-741/5
(33)	741 302 263 00	bush needle cage 3rd speed G 33 392 >>		1	
34	519 20 318	needle cage wheel 2 3rd speed G >> 33 391		1	741/0-741/5
35	741 302 286 00	needle cage wheel 2 3rd speed G 33 392 >>		1	
36	519 20 236	bush needle cage 4th speed G >> 33 391		1	741/0-741/5
(36)	741 302 264 00	bush needle cage 4th speed G 33 392 >>		1	
(37)	519 20 319	needle cage wheel 2 4th speed G >> 33 391		1	741/0-741/3

Pos	Part Number	Name	Remarks	Qty	Model
37	519 20 318	needle cage wheel 2 4th speed G >> 33 391		1	741/4-741/5
(38)	741 302 287 00	needle cage wheel 2 4th speed G 33 392 >>		1	741/0-741/3
38	741 302 286 00	needle cage wheel 2 4th speed G 33 392 >>		1	741/4-741/7
(38)	741 302 287 00	needle cage wheel 2 4th speed		1	356 B-T6 356 C
39	644 20 691	thrust ring		1	741/4-741/7
40	519 20 237	thrust washer		1	356 B-T5: 741/0-741/3 741/8
40	519 20 237	thrust washer		1	356 B-T6 356 C
41	E 644 20 206	washer		1	356 B-T5: 741/0-741/3 741/8
41	E 644 20 206	washer		1	356 B-T6 356 C
42	900 053 003 00	angular-contact bearing 3305		1	
43	644 20 204	reverse gear wheel 2		1	
44	900 117 018 00	key B 6 X 4 X 12		2	
45	519 20 332	castle nut		1	
46	N 012 538 1	cotter pin 4 X 40		1	
47	519 20 048	reverse gear wheel 3		1	
48	644 20 301	gear shift rod reverse gear		1	
49	741 303 151 02	shift fork reverse gear G >> 33 391		1	356 B-T5: 741/0-741/5
(49)	741 303 151 02	shift fork reverse gear G 33 392 >>		1	356 B-T5: 741/0-741/8
(49)	741 303 151 02	shift fork reverse gear		1	356 B-T6 356 C
50	900 095 013 00	tensioning sleeve 4 X 20		1	
51	E 741 303 101 00	gear shift rod 1st/2nd gear G >> 33 391		1	356 B-T5: 741/0-741/5
(51)	741 303 101 01	gear shift rod 1st/2nd gear G 33 392 >>		1	356 B-T5: 741/0-741/8
(51)	741 303 101 01	gear shift rod 1st/2nd gear		1	356 B-T6 356 C
52	519 20 245	shift fork 1st/2nd gear		1	
53	741 303 103 00	gear shift rod 3rd, 4th speed G >> 33 391		1	356 B-T5: 741/0-741/5
(53)	741 303 103 01	gear shift rod 3rd, 4th speed G 33 392 >>		1	356 B-T5: 741/0-741/8
(53)	741 303 103 01	gear shift rod 3rd, 4th speed		1	356 B-T6 356 C
54	E 519 20 246	shift fork 3rd, 4th speed		1	
55	900 074 033 02	hexagon-head bolt M 8 X 28		2	
56	N 012 241 8	spring washer B 8		2	

- -- E N D -- -

Model	Year	MG	SG	Illustration	Restrictions	Update	13:07	27.10.2005	PORSCHE PET PORSCHE
356	65	3	05	305-00		194			

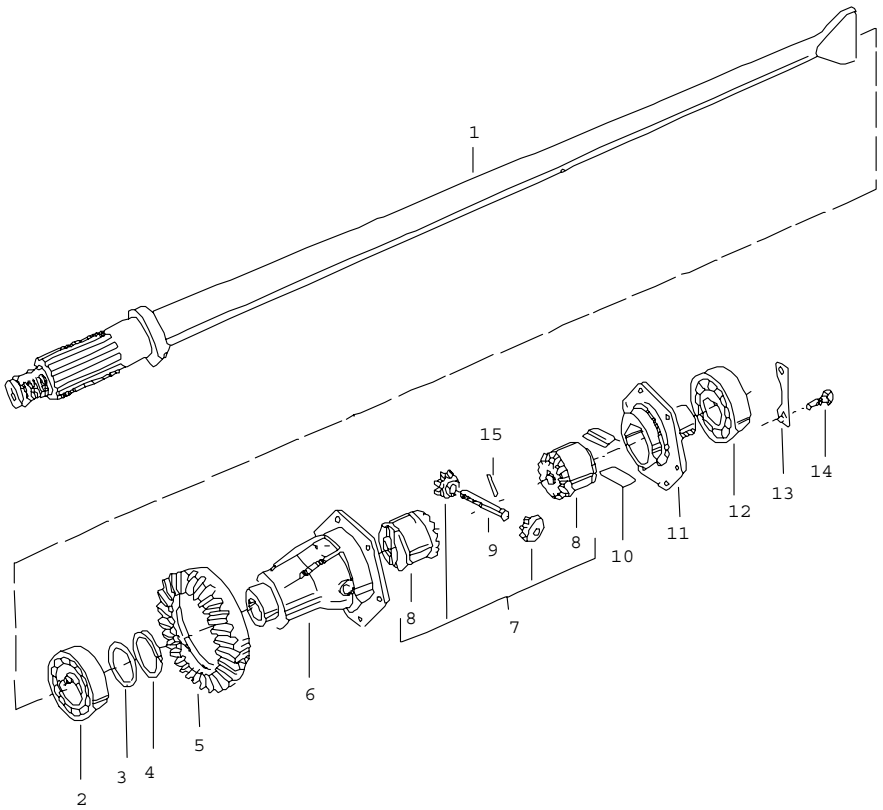

Pos	Part Number	Name	Remarks	Qty	Model
		differential			741/0-741/8 741/0A/2A 741/8A/9A 741/20A/80A
1	644 332 221 02	drive shaft		2	741/0-741/8 741/0A/2A 741/80A
(1)	644 332 221 02	rear wheel shaft		2	CARRERA 2000 741/8A/9A 741/20A
2	900 052 005 00	deep-groove ball bearing 6210		1	
3	519 32 103	spacer		X	
4	519 32 206	spacer ring 2,9 MM		X	
(4)	519 32 207	spacer ring 3,0 MM		X	
(4)	519 32 208	spacer ring 3,1 MM		X	
(4)	519 32 209	spacer ring 3,2 MM		X	
(4)	519 32 210	spacer ring 3,3 MM		X	
(4)	519 32 211	spacer ring 3,4 MM		X	
(4)	519 32 212	spacer ring 3,5 MM		X	
(4)	519 32 213	spacer ring 3,6 MM		X	
(4)	519 32 214	spacer ring 3,7 MM		X	
(4)	519 32 215	spacer ring 3,8 MM		X	
(4)	519 32 216	spacer ring 3,9 MM		X	
(4)	519 32 217	spacer ring 4,0 MM		X	
(4)	519 32 218	spacer ring 4,1 MM		X	

Pos	Part Number	Name	Remarks	Qty	Model
(4)	519 32 219	spacer ring 4,2 MM		X	
(4)	519 32 220	spacer ring 4,3 MM		X	
(4)	519 32 221	spacer ring 4,4 MM		X	
(4)	E 519 32 222	spacer ring 4,5 MM		X	
5	-	ring gear and pinion shaft see group 3/03/00 picture 15		1	
6	519 32 101	housing		1	741/0-741/8
(6)	741 332 101 01	housing		1	741/0A/2A 741/80A
(6)	741 332 101 01	housing		1	741/8A/9A 741/20A
7	644 332 043 00	differential pinions 1 set		1	
8	E 644 332 401 00	shaft bevel gear		2	
-	741 332 261 00	thrust washer for shaft bevel gear		2	741/8A/9A 741/20A
9	519 32 102	differential bolt		1	
10	690 321 232 00	slide		4	
(10)	690 321 232 00	slide oversize		X	
(10)	690 321 232 00	slide		4	CARRERA 2000 741/8A/9A 741/20A
11	741 332 215 00	housing cover		1	
12	E 900 053 004 00	angular-contact bearing 7210		1	
13	741 332 281 00	tab washer		3	741/0-741/8
(13)	741 332 281 01	tab washer		6	741/0A/2A/8A 741/9A 741/20A/80A
14	741 332 271 05	hexagon-head bolt		6	741/0-741/8
(14)	741 332 271 05	hexagon-head bolt		12	741/0A/2A/8A 741/9A 741/20A/80A
15	519 32 104	pin		1	
		- -- E N D -- -			

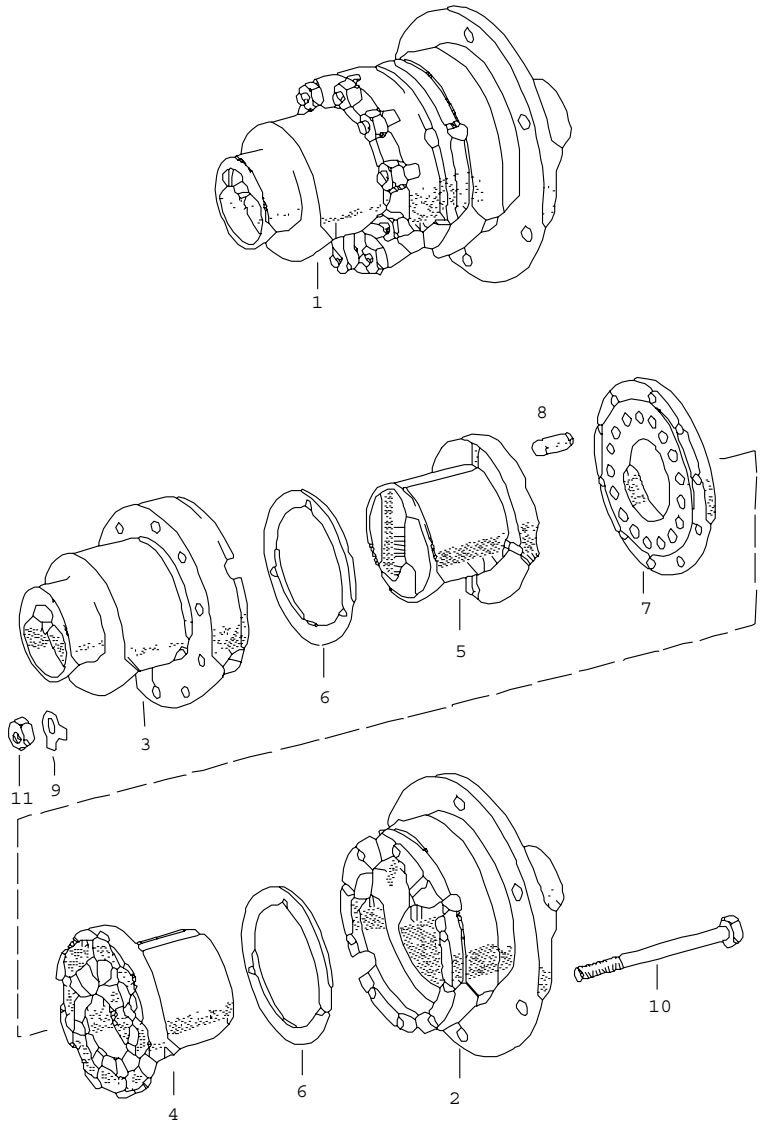

Pos	Part Number	Name	Remarks	Qty	Model
		limited-slip differential			M 741/9A
1	E 716 332 055 00	limited-slip differential		1	
2	716 332 311 00	housing	/L	1	
3	716 332 312 00	housing	/R	1	
4	716 332 053 00	bearing flange	/L	1	
5	716 332 054 00	bearing flange	/R	1	
6	716 332 437 00	thrust ring		2	
7	718 332 535 00	spacer		1	
8	718 332 525 00	stone		17	
9	999 039 001 00	tab washer		10	
10	N 010 385 3	hexagon-head bolt M 8 X 85		10	
11	900 076 025 02	hexagon nut M 8		10	
-	-	ring gear and pinion shaft see group 3/03/00 picture 15		1	
-	741 332 271 06	hexagon-head bolt for ring gear and pinion shaft		12	
-	741 332 281 01	tab washer for ring gear and pinion shaft		6	
		- -- E N D -- -			

Model	Year	MG	SG	Illustration	Restrictions	Update		
356	65	3	98	REP		194	14:40	02.11.2005

Pos	Part Number	Name	Remarks	Qty	Model
		set of seals transmission			
>>	> 741 300 111 00	transmission repair kit		1	
-	999 113 048 50	sealing ring		1	
-	519 20 135	lock washer copper		1	
-	644 20 116	gasket		2	
-	644 20 122	shim		2	
-	644 20 109	shim 0,10 MM		2	
-	644 20 110	shim 0,15 MM		2	
-	644 20 111	shim 0,20 MM		2	
-	900 112 001 50	shaft seal A 15 X 24		1	
-	900 123 009 20	sealing ring A 18 X 24 CU		1	
-	741 301 911 00	shim		1	
-	N 012 290 2	circlip 52 X 2		2	
-	E 644 20 105	snap ring		1	
-	741 301 291 00	tab washer	/L	1	
-	741 301 292 00	tab washer	/R	1	
-	E 999 042 004 01	circlip		1	
-	999 039 001 00	tab washer		1	
-	741 332 281 00	tab washer		3	
-	900 111 001 00	snap ring SP 62 A		1	
-	999 041 003 01	circlip		1	
-	N 012 241 8	spring washer B 8		30	
-	900 027 015 02	lock ring B 8		2	
-	741 301 181 00	circlip		1	

Model	Year	MG	SG	Illustration	Restrictions	Update		
356	65	3	98	REP		194	14:40	02.11.2005

Pos	Part Number	Name	Remarks	Qty	Model
-	900 028 005 01	spring washer A 10		4	
-	900 027 016 02	lock ring B 10		10	
-	900 028 014 02	spring washer B 12		2	
-	999 151 022 02	washer 8,4		2	
-	N 012 533 1	cotter pin 3 X 28		1	
-	N 012 538 1	cotter pin 4 X 40		1	
		- -- E N D -- -			

Model	Year	MG	SG	Illustration	Restrictions	Update	13:08	27.10.2005	PORSCHE PET PORSCHE
356	65	4	01	401-00		194			

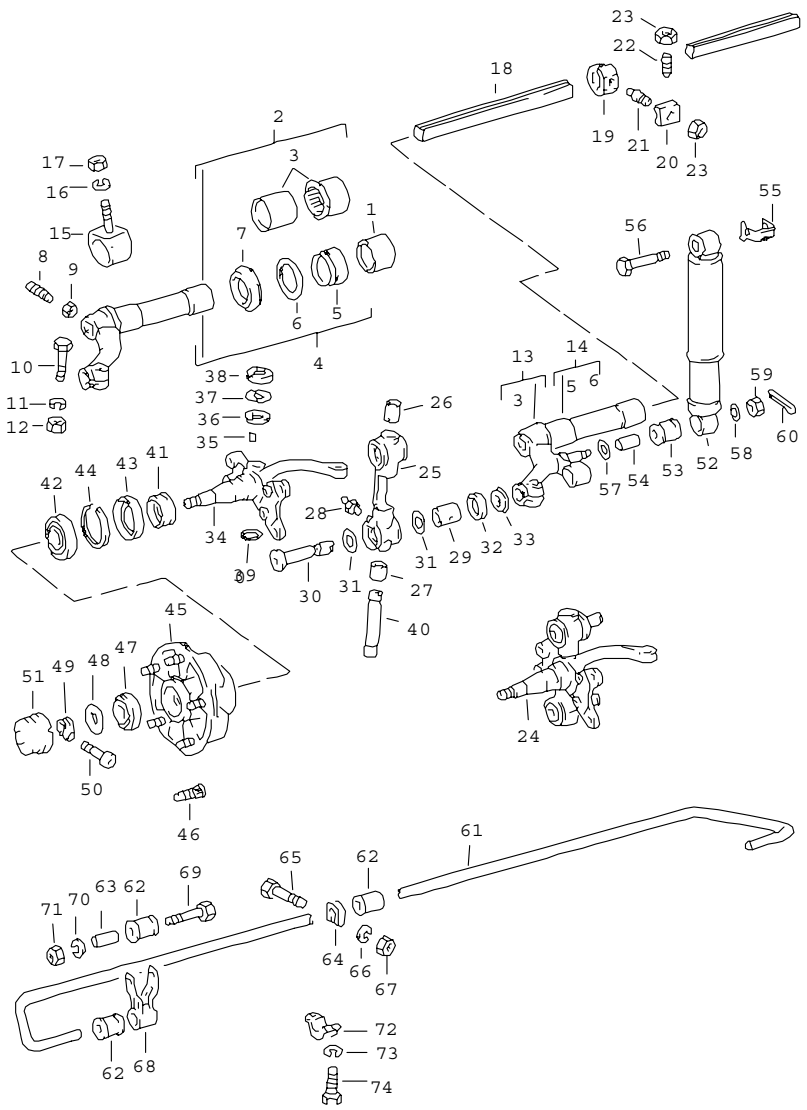

Pos	Part Number	Name	Remarks	Qty	Model
		front axle			
1	644 41 103	bearing sleeve		4	
2	E 695 341 994 00	lever upper		2	356 B
3	644 41 014	needle-roller bearing		4	356 B
4	E 695 341 994 00	lever upper		2	356 C
5	695 341 014 00	needle-roller bearing		4	356 C
6	695 341 108 00	spacer ring		4	356 C
7	644 41 403	sealing ring		4	
8	999 069 001 01	fastening screw		4	
9	644 41 111	lock nut		4	
10	N 010 445 2	hexagon-head bolt M 10 X 45		4	
11	900 027 016 02	lock ring B 10		4	
12	N 011 010 6	hexagon nut M 10		4	
13	644 341 023 01	lever lower		2	356 B
14	E 695 341 995 00	lever lower		2	356 C
15	695 341 031 01	rubber stop		2	
16	900 027 015 02	lock ring B 8		2	
17	900 076 025 02	hexagon nut M 8		2	
18	644 41 020	torsion bar		2	
19	644 41 202 1	driver		2	
20	644 41 204	stop		2	
21	644 41 203	fastening screw		2	
22	E 644 41 205	threaded pin		2	
23	644 41 111	lock nut		2	

Pos	Part Number	Name	Remarks	Qty	Model
(24)	E 644 341 007 00	supporting bow with steering knuckle	/L	1	356 B
(24)	E 644 341 007 10	supporting bow with steering knuckle	/L	1	CARRERA 2000
24	E 695 341 997 00	supporting bow with steering knuckle	/L	1	356 C
24	E 695 341 997 X	supporting bow with steering knuckle exchange	/L	1	356 C
(24)	E 644 341 008 00	supporting bow with steering knuckle	/R	1	356 B
(24)	E 644 341 008 10	supporting bow with steering knuckle	/R	1	CARRERA 2000
24	695 341 998 00	supporting bow with steering knuckle exchange	/R	1	356 C
24	695 341 998 00	supporting bow with steering knuckle	/R	1	356 C
25	E 695 341 043 00	supporting bow	/L	1	
(25)	695 341 044 00	supporting bow	/R	1	
26	E 356 41 418	bush upper		2	
27	E 356 41 415	bush lower		2	
28	-	nipple alternative parts:		X	
-	E 999 163 001 01	nipple		4	
-	E 999 163 003 02	nipple		4	
29	644 41 407	bush		4	
30	356 41 445	bolt		4	
-	695 341 993 00	repair kit for bolt		1	

Pos	Part Number	Name	Remarks	Qty	Model
31	356 41 446	spacer		36	
32	644 41 409	sealing ring		4	
33	644 41 408	sealing washer		4	
(34)	E 644 341 651 00	steering knuckle	/L	1	356 B
34	E 695 341 651 10	steering knuckle	/L	1	356 C
(34)	E 644 341 652 00	steering knuckle	/R	1	356 B
(34)	E 695 341 652 10	steering knuckle	/R	1	356 C
-	E 900 163 006 02	nipple B 8 for steering knuckle		2	CARRERA 2000
35	900 095 006 00	roll pin 3 X 6		2	
36	356 41 461	thrust washer 3,30 - 3,35 MM		X	
(36)	356 41 462	thrust washer 3,40 - 3,45 MM		X	
(36)	356 41 463	thrust washer 3,50 - 3,55 MM		X	
(36)	356 41 464	thrust washer 3,60 - 3,65 MM		X	
(36)	356 41 465	thrust washer 3,70 - 3,75 MM		X	
(36)	356 41 466	thrust washer 3,90 - 3,95 MM		X	
(36)	356 41 467	thrust washer 4,10 - 4,15 MM		X	
(36)	356 41 468	thrust washer 4,30 - 4,35 MM		X	
37	356 41 443	thrust washer		2	
38	356 41 444	cap		2	
39	E 000 97 309	sealing ring		2	
40	695 341 675 10	pin		2	
-	695 341 992 00	repair kit for pin		1	

Pos	Part Number	Name	Remarks	Qty	Model
(41)	644 341 661 00	spacer ring		2	356 B
41	695 341 661 01	spacer ring		2	356 C
(42)	900 059 001 00	ball bearing 30 206		2	356 B
42	999 059 098 00	taper roller bearing		2	356 C
(43)	356 41 448	sealing ring		2	356 B
(43)	356 41 448	sealing ring		2	CARRERA 2000
43	477 405 641	radial sealing ring B 2 SL 45 X 62 X 12		2	356 C
44	644 341 663 00	intermediate ring		2	356 B
45	E 901 341 065 03	front wheel hub with wheel bolt		2	356 C
46	901 341 671 01	wheel bolt		10	356 C
(46)	E 901 341 671 03	wheel bolt oversize		X	356 C
(47)	900 059 002 00	ball bearing 30 304		2	356 B
47	999 059 065 00	taper roller bearing		2	356 C
(48)	644 341 667 00	thrust washer		2	356 B
48	999 025 043 00	washer		2	356 C
49	914 341 671 00	clamping nut		2	
50	999 119 001 01	pan-head screw		2	
51	E 356 41 453	cap	/L	1	356 B
51	E 695 341 683 00	cap	/L	1	356 C
51	E 356 41 453	cap it is necessary to rework	/R	1	356 B
(51)	914 341 684 00	cap	/R	1	356 C
52	644 343 501 13	shock absorber	M	2	CARRERA 1600 /S/S90: 1600 SC CARRERA 2000
(53)	901 333 795 00	rubber mounting for 644. 41.501.2		4	
53	911 333 521 00	rubber mounting for 644.343.501.10 644.343.501.12 644.343.501.13		4	
(54)	E 644 41 522	bush for 644. 41.501.2		4	
54	E 644 343 562 10	bush for 644.343.501.10 644.343.501.12 644.343.501.13		4	
55	644 343 581 00	tab washer		2	
56	644 41 511	screw		2	
57	000 95 709	washer		2	
58	900 025 008 09	washer		2	
59	E 900 079 003 02	castle nut M 10		2	
60	N 012 522 1	cotter pin 2 X 22		2	
(61)	E 644 41 603	stabiliser $ 15 MM		1	356 B
61	E 644 41 603 1	stabiliser $ 16 MM		1	CARRERA/356C
62	644 41 602	rubber mounting		6	
63	644 41 601	bush		2	
64	644 41 606	clip		2	
65	N 010 347 5	hexagon-head bolt M 6 X 35		2	
66	N 012 006 4	lock ring B 6		2	
67	900 076 010 02	hexagon nut M 6		2	
68	644 41 061	fork		2	
69	900 074 063 02	hexagon-head bolt M 10 X 55		2	
70	900 027 016 02	lock ring B 10		2	

Pos	Part Number	Name	Remarks	Qty	Model	Pos	Part Number	Name	Remarks	Qty	Model
71	N 011 010 6	hexagon nut M 10		2							
72	E 644 41 605	clamp		2							
73	900 027 015 02	lock ring B 8		4							
74	999 093 010 02	hexagon-head bolt M 8 X 20		4							
		- -- E N D -- -									

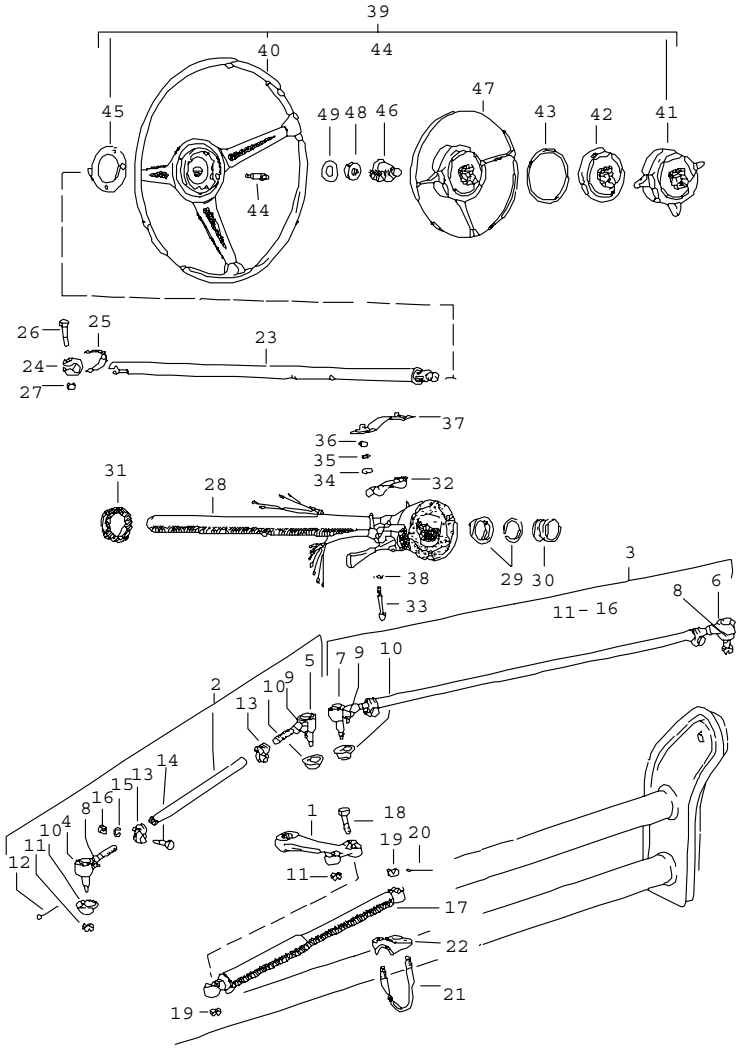

Pos	Part Number	Name	Remarks	Qty	Model
		steering parts			
1	E 644 347 301 02	lever	/LL	1	
(1)	E 644 347 302 02	lever	/RL	1	
2	644 347 311 01	tie rod	/LL/L	1	
(2)	644 347 313 01	tie rod	/RL/L	1	
3	644 347 312 01	tie rod	/LL/R	1	
(3)	644 347 314 01	tie rod	/RL/R	1	
4	644 347 311 01	track rod	/LL	1	
(4)	644 347 324 02	ball joint	/RL	1	
5	644 347 311 01	track rod	/LL	1	
(5)	E 644 347 323 02	ball joint	/RL	1	
6	644 347 312 01	track rod	/LL	1	
(6)	644 347 311 01	track rod	/RL	1	
7	644 347 312 01	track rod	/LL	1	
(7)	644 347 311 01	track rod	/RL	1	
8	900 163 001 02	nipple A 6		2	
9	E 900 163 004 02	nipple C 6		2	
10	E 356 47 314	sealing bellows		4	
11	N 011 210 1	castle nut M 10 X 1		4	
12	900 021 013 00	cotter pin 2 X 25		4	
13	E 644 47 313	clip		4	
14	E 900 082 001 00	hexagon-head bolt M 8 X 1 X 30		4	
15	900 027 015 02	lock ring B 8		4	
16	N 011 018 4	hexagon nut M 8 X 1		4	
17	PCG 347 501 00	damper		1	

Pos	Part Number	Name	Remarks	Qty	Model
18	900 082 010 02	hexagon-head bolt M 10 X 1,5 X 52 S		1	
19	N 011 210 1	castle nut M 10 X 1		3	
20	900 021 013 00	cotter pin 2 X 25		3	
21	E 644 47 303	clamp		1	356 B-T5
(21)	E 695 347 057 00	clamp		1	356 B-T6
22	E 644 47 302	tensioning plate		1	
23	E 695 347 601 01	steering shaft		1	356 B
(23)	E 695 347 601 02	steering shaft not for - CARRERA 2000-		1	356 C
(23)	756 347 601 00	steering shaft		1	CARRERA ABARTH 692/3/3A
24	644 347 651 00	clip		1	
25	644 347 681 00	tab washer		1	
26	N 010 340 4	hexagon-head bolt M 8 X 40		1 1	
27	900 076 025 02	hexagon nut		1	
28	E 644 347 007 05	steering outer tube	/LL	1	356 B
(28)	E 644 347 009 05	steering outer tube	/RL	1	
(28)	E 644 347 008 05	steering outer tube 30 MM	/LL	1	356 B:M
(28)	E 644 347 009 06	steering outer tube 60 MM for 644.347.801.07		1	356 C
(28)	756 347 701 00	steering outer tube		1	CARRERA ABARTH 692/3/3A
29	914 347 711 00	bearing		1	
-	695 347 725 00	support ring		1	
30	914 347 713 00	compression spring		1	
31	E 644 347 931 00	bearing		1	
32	E 644 347 753 05	bearing shell		1	ROADSTER
33	900 067 015 01	hexagon socket head bolt M 6 X 45		2	ROADSTER
(33)	900 067 013 02	pan-head screw M 6 X 35		2	
34	900 151 006 09	washer A 6,4 F >> 111 930 F >> 153 590 F >> 80 039		2	 COUPE -REUTTER- CABRIO HARDTOP ROADSTER
35	N 012 007 2	lock ring A 6 F >> 111 930 F >> 153 590 F >> 80 039		2	 COUPE -REUTTER- CABRIO HARDTOP ROADSTER
36	900 076 010 02	hexagon nut M 6 F >> 111 930 F >> 153 590 F >> 80 039		2	 COUPE -REUTTER- CABRIO HARDTOP ROADSTER
37	E 644 502 922 05	nut lock F 111 931 >> F 153 591 >> F 80 040 >>		1	 COUPE -REUTTER- CABRIO HARDTOP ROADSTER
38	N 012 007 2	lock ring 6 F 111 931 >> F 153 591 >> F 80 040 >>		2	 COUPE -REUTTER- CABRIO HARDTOP ROADSTER
39	E 644 347 081 06	steering wheel complete		1	
40	644 347 801 05	steering wheel $ 425 MM only in exchange 644.347.801.AX.1AJ		1	356 B-T5
(40)	644 347 801 05	steering wheel only in exchange 644.347.801AX.1AJ		1	356 B-T6

Pos	Part Number	Name	Remarks	Qty	Model	Pos	Part Number	Name	Remarks	Qty	Model
(40)	E 644 347 082 15	steering wheel with wooden ring		1	CARRERA 2000 M						
(40)	E 644 347 801 07	steering wheel with elevated hub 30 MM		1							
-	644 347 084 05	steering wheel with wooden ring and horn button		1	M						
41	E 644 347 803 05	horn button complete		1							
42	644 347 822 05	cap		1							
43	E 644 347 829 05	ring		1							
44	E 914 347 831 00	contact pin		1							
45	901 613 325 05	cancelling ring		1							
-	900 269 006 07	countersunk-head screw		2							
46	901 347 823 01	rubber insert		1							
(46)	E 644 347 835 05	rubber insert		1	M						
47	E 644 347 085 05	horn button complete		1	M						
-	E 999 039 005 10	contact spring for horn button		1							
48	900 078 007 02	hexagon nut M 18 X 1,5		1							
49	N 012 239 1	spring washer B 18		1							
		- -- E N D -- -									

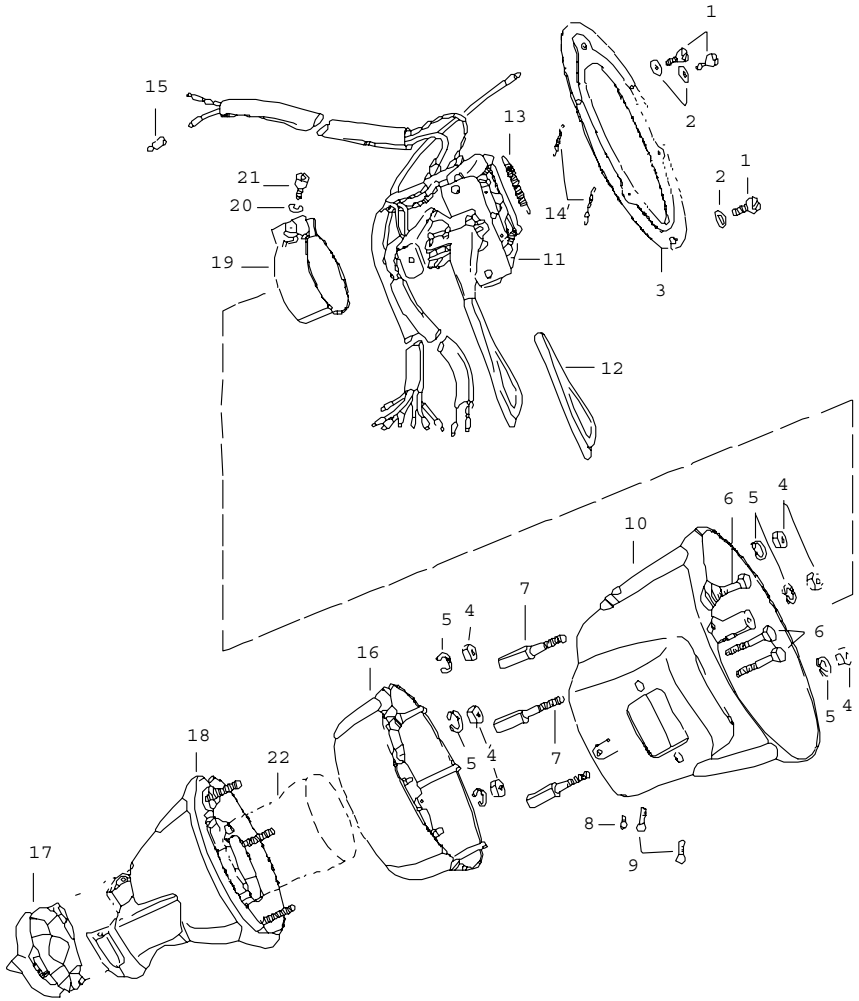

Pos	Part Number	Name	Remarks	Qty	Model
		steering column switch			
1	E 900 014 002 00	pan-head screw AM 4 X 6		3	
2	N 042 122 2	shake-proof washer J 4,3		3	
3	E 644 347 735 05	contacts		1	
4	N 011 008 8	hexagon nut M 5		3	
5	900 027 003 01	lock ring A 5		3	
6	900 075 121 02	hexagon-head bolt M 5 X 35		3	
7	E 644 347 765 05	screw for steering column extension 30 MM	/LL	3	M
8	E 644 347 763 05	oval-head screw		1	
9	E 644 347 764 05	oval-head screw		2	
10	E 644 347 759 05	housing		1	
11	E 644 613 301 05	switch complete		1	
12	E 644 552 853 05	handle		1	
13	E 644 613 351 05	tension spring		1	
14	901 613 352 00	tension spring		2	
15	999 652 102 10	cable plug		12	
-	E 999 652 103 10	cable connection		9	
16	E 644 347 758 05	intermediate ring for steering column extension	/LL	1	M
22	695 347 701 01	steering column tube		1	
		- -- E N D -- -			

Model	Year	MG	SG	Illustration	Restrictions	Update	13:09	27.10.2005	PORSCHE PET PORSCHE
356	65	4	03	403-10		194			

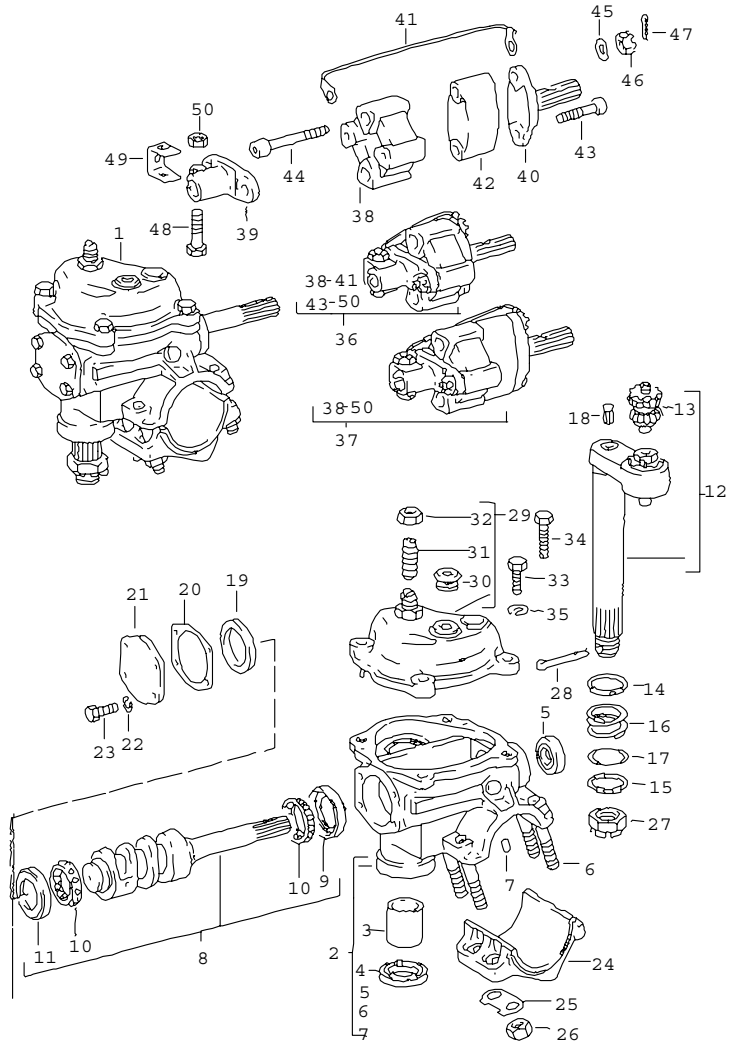

Pos	Part Number	Name	Remarks	Qty	Model
		steering gear steering coupling			
1	E 644 347 010 01	steering gear without steering coupling		1	
2	E 644 347 011 01	housing		1	
3	E 644 347 105 01	bearing sleeve		1	
4	E 900 113 004 50	sealing ring A 25 X 36 X 7		1	
5	E 900 113 003 50	sealing ring BASL 16 X 28 X 7		1	
6	E 900 081 009 00	stud M 10 X 42		4	
7	E 644 347 106 01	straight pin		1	
8	E 644 347 013 01	steering worm		1	
9	E 644 347 122 01	ring		1	
10	E 644 347 125 01	bearing		2	
11	E 644 347 123 01	ring		1	
12	E 644 347 015 01	shaft		1	
13	E 644 347 133 01	bearing		1	
14	E 644 347 151 01	thrust washer		1	
15	E 644 347 152 01	thrust washer		X	
16	E 644 347 153 01	compression spring		1	
17	E 644 347 154 01	thrust washer		X	
(17)	E 644 347 154 02	thrust washer		X	
18	E 644 347 155 01	bolt		1	
19	E 644 347 162 01	intermediate ring		1	
20	E 644 347 163 01	shim 0,10 MM		X	
(20)	E 644 347 163 02	shim 0,12 MM		X	
(20)	E 644 347 163 03	shim 0,15 MM		X	

Pos	Part Number	Name	Remarks	Qty	Model
(20)	E 644 347 163 04	shim 0,30 MM		X	
21	E 644 347 161 01	flange		1	
22	N 012 007 2	lock ring A 6		4	
23	E N 010 216 7	hexagon-head bolt M 6 X 18		4	
24	E 644 347 141 01	clip		1	
25	644 347 149 01	tab washer		2	
26	N 011 010 6	hexagon nut M 10		4	
27	900 079 010 00	castle nut M 20 X 1,5		1	
28	N 012 538 1	cotter pin 4 X 40		1	
29	E 644 347 012 01	housing cover		1	
30	E 644 347 112 01	screw plug		1	
31	E 644 347 113 01	adjusting screw		1	
32	E 644 347 115 01	hexagon nut		1	
33	900 075 079 02	hexagon-head bolt M 8 X 22		3	
34	N 010 233 6	hexagon-head bolt M 8 X 28		1	
35	900 027 015 02	lock ring A 8		4	
(36)	644 347 020 00	steering coupling		1	356 B
36	695 347 020 00	steering coupling not for - CARRERA 2000 -	/LL	1	356 C
37	E 695 347 020 01	steering coupling steering column extension 30 + 60 MM not for - CARRERA 2000-	/RL /LL	1	356 C 356 C:M
(38)	644 347 201 00	articulated piece		1	356 B
38	695 347 201 00	articulated piece not for - CARRERA 2000 -		1	356 C
39	644 347 203 00	joint flange		1	
40	644 347 204 00	joint flange		1	
(41)	644 47 104	ground strap	/LL	1	
(41)	E 356 47 104	ground strap steering column extension		1	356 B
41	E 695 347 104 06	ground strap steering column extension 30 + 60 MM	/RL /LL	1	356 C 356 C:M
42	E 356 47 103	intermediate piece steering column extension 30 MM		1	M
(43)	E 900 074 081 01	hexagon-head bolt M 8 X 30		4	356 B
(43)	E 900 074 081 01	hexagon-head bolt M 8 X 30 steering column extension 30 MM		2	356 B:M
43	E 999 067 004 02	pan-head screw not for - CARRERA 2000 -	/LL	4	356 C
(43)	E 999 067 004 02	pan-head screw not for - CARRERA 2000 -	/RL	2	356 C
(44)	E 356 47 105	hexagon-head bolt steering column extension 30 MM		2	356 B:M
44	E 999 067 005 02	pan-head screw steering column extension 30 + 60 MM not for - CARRERA 2000 -	/RL /LL	2	356 C 356 C:M
45	N 012 241 1	spring washer B 8		2	
(46)	900 077 003 01	castle nut M 8		4	356 B

Pos	Part Number	Name	Remarks	Qty	Model	Pos	Part Number	Name	Remarks	Qty	Model
46	E 900 079 015 02	castle nut M 8		4	356 C						
47	N 012 521 1	cotter pin 2 X 18		4							
48	E 999 074 004 01	hexagon-head bolt		1							
49	644 347 281 00	tab washer		1							
50	900 076 025 02	hexagon nut M 8		1							
		- -- E N D -- -									

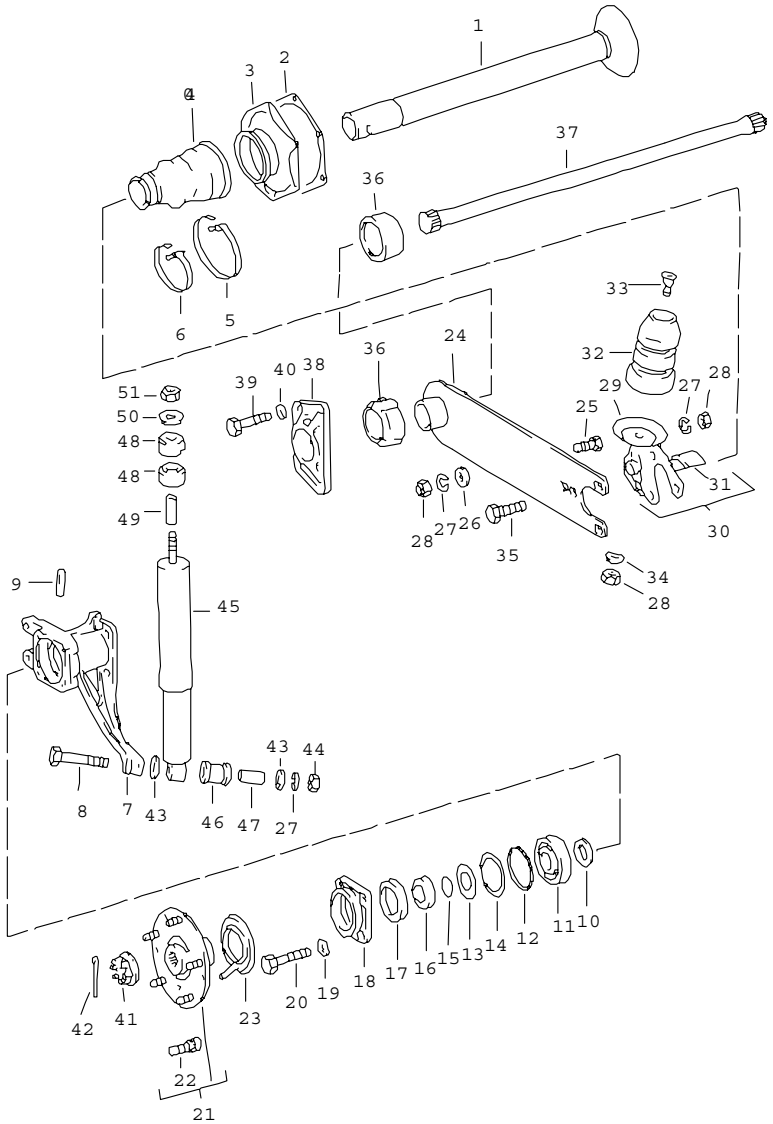

Pos	Part Number	Name	Remarks	Qty	Model
		rear axle			
1	E 644 331 201 00	rear-axle cross-tube		2	
2	644 331 931 01	gasket 0,30 MM		X	
(2)	644 331 931 01	gasket 0,25 MM		X	
(2)	644 331 931 00	gasket 0,20 MM		X	
3	644 331 221 00	housing use also: sealing ring 111.501.139		2	
4	644 34 191	boot		2	
(4)	644 34 191 1	boot GESCHLITZT		2	
-	PCG 598 001 00	set of fastening parts without hose clamp		X	
-	900 146 025 02	half-round screw M 4 X 18		12	
-	900 151 028 02	washer 4,3		24	
-	N 011 004 6	hexagon nut M 4		12	
5	999 511 045 02	hose clamp for 644. 34.191.1		2	
(5)	999 511 045 02	hose clamp for 644. 34.191		2	
6	999 512 102 02	hose clamp for 644. 34.191.1		2	
(6)	E 999 511 044 02	hose clamp for 644. 34.191		2	
(7)	644 34 011	bearing flange	/L	1	356 B
7	695 331 211 10	bearing flange	/L	1	356 C
(7)	644 34 012	bearing flange	/R	1	356 B

Pos	Part Number	Name	Remarks	Qty	Model
(7)	E 695 331 212 10	bearing flange	/R	1	356 C
8	N 010 183 3	hexagon-head bolt M 12 X 1,5 X 75		2	356 C
9	N 012 801 1	pin 10 X 40		2	
10	644 331 231 00	spacer		2	
11	900 052 006 00	deep-groove ball bearing		2	
(12)	356 34 144	sealing ring		2	356 B
12	999 701 092 50	o-ring		2	356 C
13	356 34 402	washer		2	
14	356 34 410	adjusting shim		X	356 B
15	356 34 142	washer		2	
16	356 34 401	intermediate ring		2	356 B
(17)	113 501 315 H	sealing ring		2	356 B
17	999 113 038 50	sealing ring A 44 X 58,4 X 10		2	356 C
18	644 331 251 00	housing		2	356 B
19	N 012 230 1	spring washer B 10		8	356 B
20	E 999 074 006 01	fastening screw		8	356 B
21	E 695 331 903 00	rear-wheel hub		2	356 C
22	901 341 671 01	wheel bolt		10	356 C
23	E 695 331 085 00	protective plate		2	356 C
(24)	E 644 34 104	strut		2	356 B
24	E 695 333 013 00	strut		2	356 C
25	999 093 005 02	hexagon-head bolt M 12 X 1,5 X 22		2	
26	356 34 153	washer		2	
27	900 027 017 02	lock ring B 12		8	
28	N 011 020 8	hexagon nut M 12 X 1,5		8	
(29)	E 644 34 023	bracket	/L	1	356 B

Pos	Part Number	Name	Remarks	Qty	Model
(29)	E 644 34 024	bracket	/R	1	356 B
30	E 695 333 035 00	bracket	/L	1	356 C
(30)	E 695 333 036 00	bracket	/R	1	356 C
31	E 695 333 261 00	stop	/L	1	356 C
(31)	E 695 333 262 00	stop	/R	1	356 C
(32)	644 34 206	rubber stop		2	356 B
32	695 333 311 00	rubber stop		2	356 C
(33)	E 644 34 205	shouldered bolt		2	356 B
33	695 333 513 00	shouldered bolt		2	356 C
34	900 028 014 01	spring washer B 12		4	
35	900 082 006 01	hexagon-head bolt M 12 X 1,5 X 30		6	
(36)	644 333 131 00	rubber sleeve F >> 131 720 F >> 154 229 F >> 88 663		4	356 B-T5 COUPE -REUTTER- CABRIO HARDTOP ROADSTER
36	644 333 131 00	rubber sleeve inner F 131 721 >> F 154 230 >> F 88 664 >>		2	356 B-T5/T6 356 C COUPE -REUTER- CABRIO HARDTOP ROADSTER
(36)	644 333 131 01	rubber sleeve outer F 131 721 >> F 154 230 >> F 88 664 >>		2	356 B-T5/T6 356 C COUPE -REUTER- CABRIO HARDTOP ROADSTER
(37)	644 333 101 01	torsion bar torsion bar see group 5/02/00		2 2	1600/1600 S 1600:M 1600 S:M 1600 S90 CARRERA
37	695 333 101 03	torsion bar	/L	1	356 C
(37)	695 333 102 03	torsion bar	/R	1	356 C

Pos	Part Number	Name	Remarks	Qty	Model
(38)	644 333 151 00	cover F >> 131 720 F >> 154 229 F >> 88 663		2	356 B-T5 COUPE -REUTTER- CABRIO HARDTOP ROADSTER
(38)	644 333 151 01	cover F 131 721 >> F 154 230 >> F 88 664 >>		2	356 B-T5/T6 COUPE -REUTER- CABRIO HARDTOP ROADSTER
38	695 333 151 01	cover		2	356 C
(39)	900 074 057 02	hexagon-head bolt M 10 X 30 F >> 131 720 F >> 154 229 F >> 88 663		8	356 B-T5 COUPE -REUTTER- CABRIO HARDTOP ROADSTER
39	900 075 041 09	hexagon-head bolt M 10 X 25 F 131 721 >> F 154 230 >> F 88 664 >>		8	356 B-T5/6 356 C COUPE -REUTER- CABRIO HARDTOP ROADSTER
40	900 025 008 02	washer 10,5		8	
41	644 332 271 00	castle nut		2	
42	900 021 025 02	cotter pin 5 X 45		2	
43	900 025 009 02	washer 13		4	
44	900 076 016 02	hexagon nut M 12 X 1,5 blue		2	 M 1600 SC CARRERA
(45)	644 333 501 13	shock absorber blue		2	1600 /S/S90: M 1600 SC CARRERA
(46)	901 333 795 00	rubber mounting for 644. 34.501.2		2	
46	E 644 343 561 10	rubber mounting for 644.333.501.10 644.333.501.12 644.333.501.13		2	
(47)	E 644 41 522	bush for 644. 34.501.2		2	
47	E 644 343 562 10	bush for 644.333.501.10 644.333.501.12 644.333.501.13		2	
48	911 333 521 00	ring		4	
49	911 333 522 00	bush		2	
50	911 333 523 00	washer		2	
51	900 084 013 02	lock nut		2	
		- -- E N D -- -			

Model	Year	MG	SG	Illustration	Restrictions	Update	13:09	27.10.2005	PORSCHE PET PORSCHE
356	65	5	02	502-00		194			

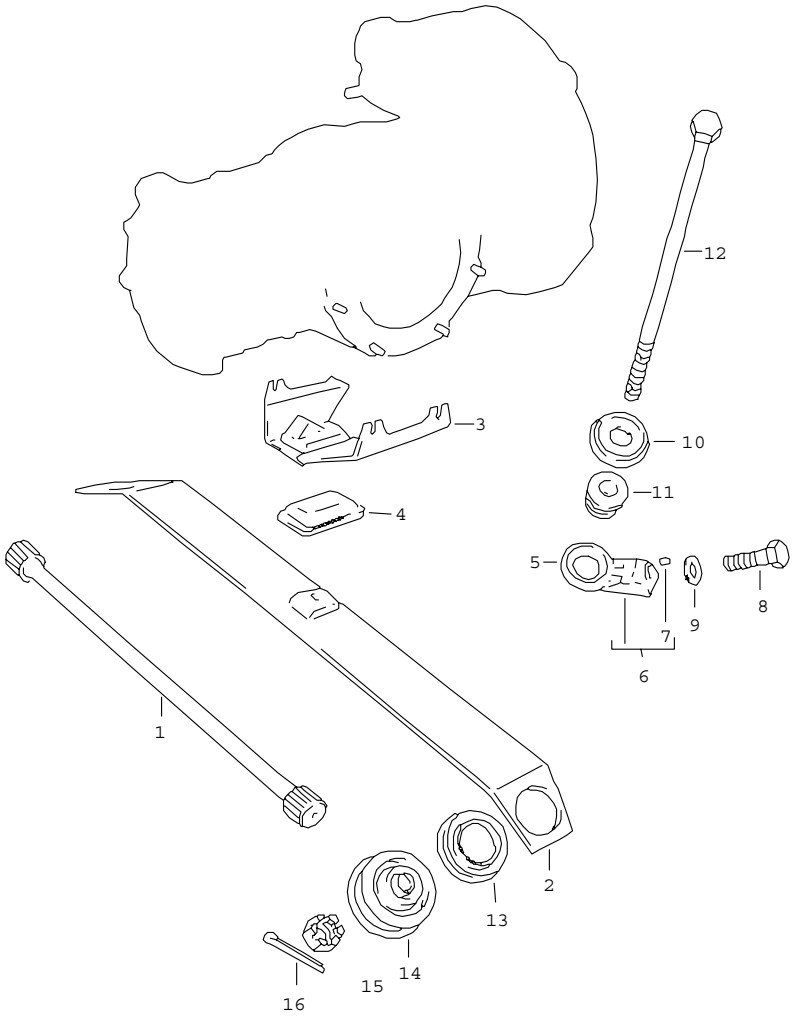

Pos	Part Number	Name	Remarks	Qty	Model
		rear axle additional spring			1600 :M 1600 S:M 1600 S90 CARRERA
1	695 333 103 00	torsion bar	/L	1	
(1)	695 333 104 00	torsion bar	/R	1	
2	E 695 333 021 00	additional spring		1	
3	E 695 333 025 00	supporting plate		1	
4	695 333 221 00	rubber mounting		1	
5	695 333 231 00	supporting plate		2	356 B
6	695 333 023 00	supporting plate complete		2	356 C
7	900 091 003 00	dowel pin 5 X 8		2	356 B/C
8	E 900 083 023 01	hexagon-head bolt M 12 X 1,5 X 30		2	
9	N 012 006 4	lock ring B 12		2	
10	695 333 233 00	concave washer		2	
11	695 333 235 00	rubber mounting		2	
12	E 695 333 241 01	tensioning device		2	
13	695 333 205 00	seat		2	
14	695 333 207 00	rubber mounting		2	
15	E 900 079 003 02	castle nut M 10		2	
16	N 012 522 1	cotter pin 2 X 22		2	
-	E 644 34 104	spring brace		2	
-	644 333 151 01	housing		2	
-	644 333 131 00	rubber mounting inner		2	
-	644 333 131 01	rubber mounting outer		2	
		- -- E N D -- -			

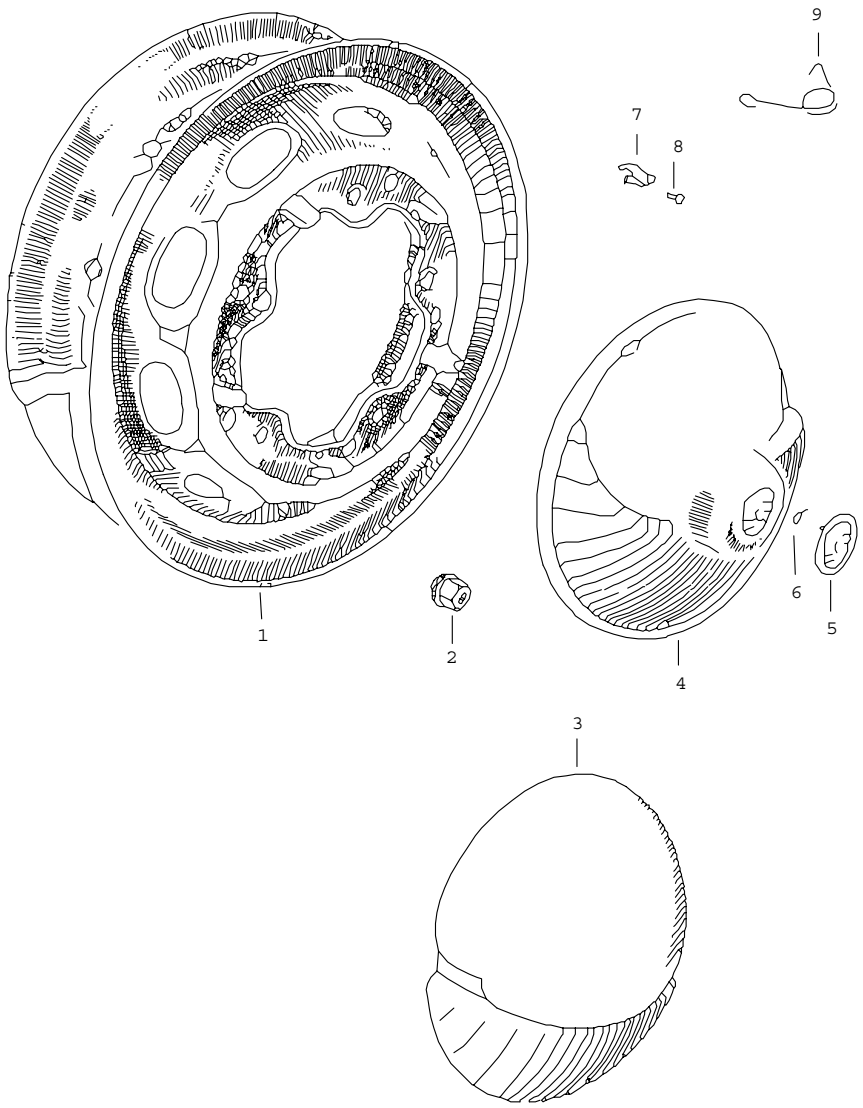

Pos	Part Number	Name	Remarks	Qty	Model
		wheels			356 B
-	E 999 985 056 X0	tyre - PNEUMANT - 165 R15 86V		5	
-	911 361 056 X0	hose		5	
1	E 644 68 101	perforated disc wheel 4 1/2 J X 15 prime coated		5	1600 /S/S90
(1)	E 644 68 101 10	perforated disc wheel 4 1/2 J X 15 chrome		5	1600 /S/S90
(1)	E 644 68 101 11	perforated disc wheel 4 1/2 J X 15 silver metallic lacquered		5	1600 /S/S90
(1)	E 644 68 110 1	perforated disc wheel 4 1/2 J X 15 light alloy		5	CARRERA 1600 GT
(1)	E 695 361 101 11	perforated disc wheel 5 K X 15 light alloy		5	CARRERA 2000 GT
(1)	695 361 012 10	perforated disc wheel 4 1/2 J X 15 silver metallic lacquered		5	CARRERA 2000 GT:M
2	N 020 112 1	ball seat nut A 14 X 1,5		20	
3	PCG 361 002 00	hub cap		4	1600
(3)	E 550 68 105	hub cap aluminium		4	CARRERA 1600 GT
4	644 361 031 11	hub cap		4	1600 /S/S90
5	644 559 801 00	badge for hub cap 644.361.031.11		4	1600 /S/S90
(4)	644 361 301 11	hub cap without badge		4	1600 /S/S90
6	999 507 212 01	speed nut		12	1600 /S/S90
7	E 356 68 119	clamping spring		25	

Pos	Part Number	Name	Remarks	Qty	Model	Pos	Part Number	Name	Remarks	Qty	Model
8	N 013 407 1	rivet 4,5 X 7 CU		25							
9	901 361 121 00	retainer spring rubber valve		5							
-	E 644 504 971 00	retaining strap for spare wheel		1							
		- -- E N D -- -									

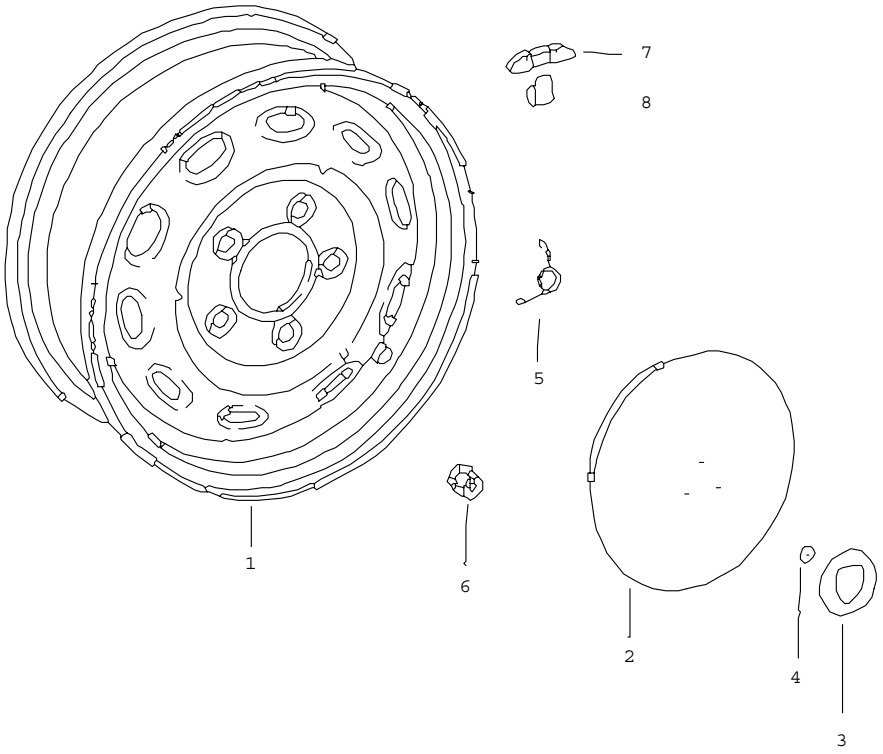

Pos	Part Number	Name	Remarks	Qty	Model
		wheels			356 C
-	E 999 985 056 X0	tyre - PNEUMANT - 165 R15 86V		5	
-	911 361 056 X0	hose		5	
1	901 361 013 03	perforated disc wheel 4 1/2 J X 15 H2 ET 42 prime coated		5	
1	E 901 361 013 23	perforated disc wheel 4 1/2 J X 15 H2 ET 42 chrome		5	
1	911 361 022 00	perforated disc wheel 5 1/2 J X 15 H2 ET 42 prime coated		5	
1	E 911 361 022 20	perforated disc wheel 5 1/2 J X 15 H2 ET 42 chrome		5	
2	E 901 361 301 04	hub cap with bores		4	
3	644 559 801 00	badge coloured		4	
3	901 559 801 01	badge mat chrome		4	
4	999 591 423 03	tapping nut $ 3		12	
5	901 361 121 00	retainer spring for rubber valve		5	
6	N 020 112 1	ball seat nut A 14		20	
		weight			
7	928 361 411 00	20 GR		X	
7	928 361 412 00	30 GR		X	
7	928 361 413 00	40 GR		X	
7	928 361 414 00	50 GR		X	
7	928 361 415 00	60 GR		X	
7	928 361 416 00	70 GR		X	

Pos	Part Number	Name	Remarks	Qty	Model	Pos	Part Number	Name	Remarks	Qty	Model
7	928 361 417 00	80 GR		X							
8	928 361 420 01	retainer spring for weight		X							
		- -- E N D -- -									

Model	Year	MG	SG	Illustration	Restrictions	Update			
356	65	6	01	601-10		194	13:10	27.10.2005	PORSCHE PET PORSCHE

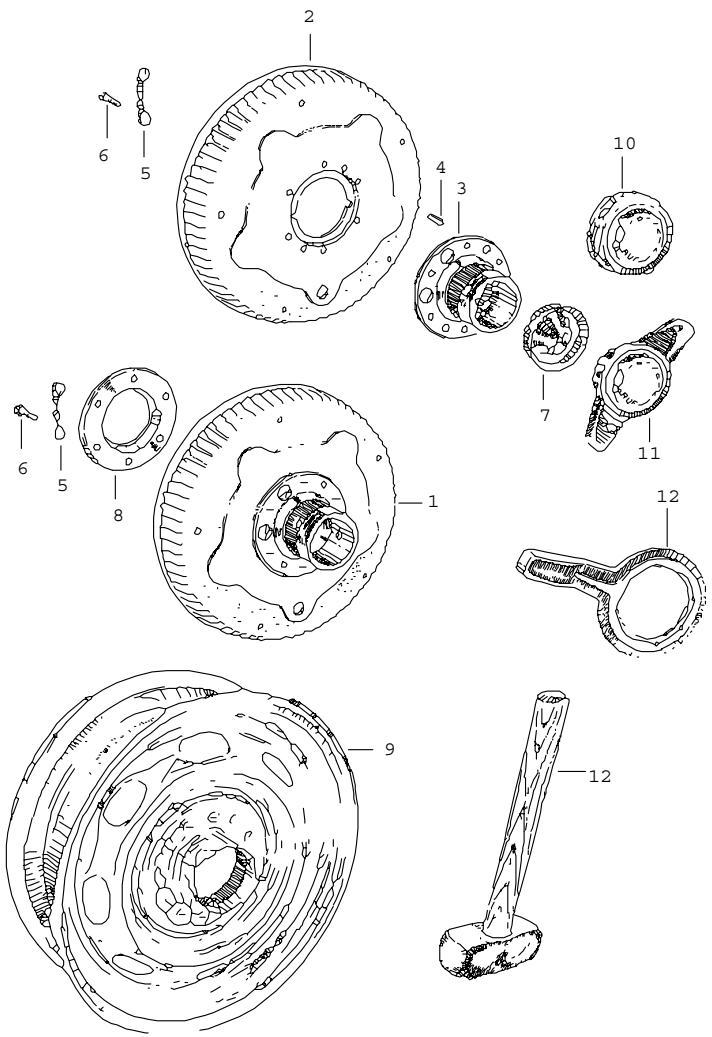

Pos	Part Number	Name	Remarks	Qty	Model
		perforated disc wheel central locking with mounting parts			1600 /S/S90
1	E 695 341 061 30	brake drum complete	/V/L	1	
(1)	E 695 341 062 30	brake drum complete	/V/R	1	
(1)	E 695 331 061 30	brake drum complete	/H/L	1	
(1)	E 695 331 062 30	brake drum complete	/H/R	1	
2	E 695 331 601 30	brake drum		4	
3	E 356 41 437	flange hub	/V/L	1	
(3)	E 356 41 438	flange hub	/V/R	1	
(3)	E 356 34 405	flange hub	/H/L	1	
(3)	E 356 34 406	flange hub	/H/R	1	
4	900 012 025 00	straight pin 10 M 6 X 16		8	
5	E 356 34 408	tab washer		12	
6	E 356 34 409	hexagon-head bolt		24	
7	E 356 41 439	cover	/V/L	1	
(7)	E 356 41 440	cover	/V/R	1	
8	E 356 34 407	drip pan		2	
9	E 644 68 010	perforated disc wheel 4 1/2 J X 15 chrome		5	
10	E 644 361 015 00	wheel nut right thread	/L	2	
(10)	E 644 361 016 00	wheel nut left thread	/R	2	
11	E 356 68 121	wheel nut right thread	/L	2	

Pos	Part Number	Name	Remarks	Qty	Model	Pos	Part Number	Name	Remarks	Qty	Model
(11)	E 356 68 122	wheel nut left thread	/R	2							
12	E 644 721 730 00	double socket wrench		1							
		- -- E N D -- -									

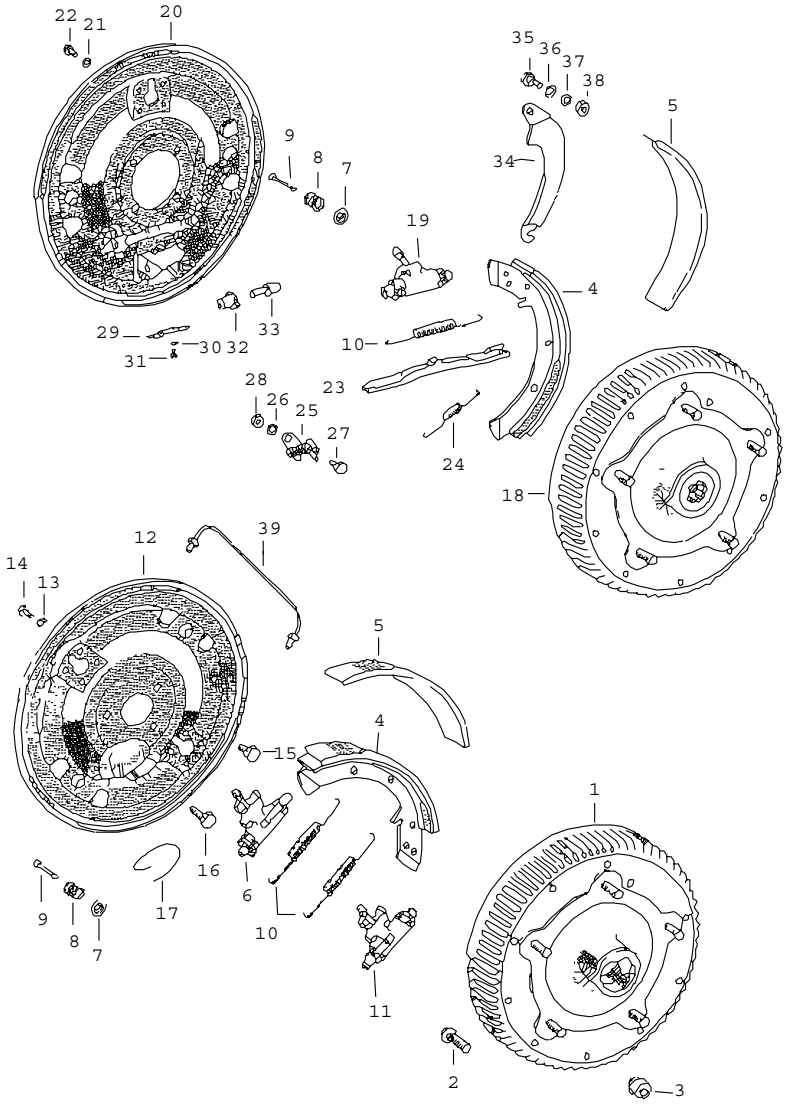

Pos	Part Number	Name	Remarks	Qty	Model
		brake			356 B CARRERA 16000 GT
1	695 341 061 01	brake drum 40 MM	/V	2	
(1)	E 644 42 045	brake drum 60 MM	/V	2	CARRERA 1600GT
-	E 695 341 609 00	lock ring for brake drum		2	
2	356 34 132	wheel bolt	/V/H	20	
(2)	356 34 132	wheel bolt	/V	10	CARRERA 1600 GT
(2)	356 331 903 00	wheel bolt	/H	10	CARRERA 1600 GT
-	E 550 42 121	spacer	/H	10	CARRERA 1600 GT
(2)	E 356 331 902 00	wheel bolt oversize	/V	X	CARRERA 1600 GT
(2)	356 331 903 00	wheel bolt oversize	/H	X	CARRERA 1600 GT
3	N 020 112 1	ball seat nut A 14 X 1,5		20	
4	695 351 033 01	brake shoe with pad 40 MM	/V/H	8	
4	695 351 033 CX	brake shoe exchange with pad 40 MM	/V/H	X	
4	E 695 351 033 BX	brake shoe oversize exchange with pad 40 MM	/V/H	X	
(4)	E 695 351 033 10	brake shoe with pad 60 MM	/V	4	CARRERA 1600 GT
(4)	695 351 033 01	brake shoe with pad 40 MM	/H	4	CARRERA 1600 GT

Pos	Part Number	Name	Remarks	Qty	Model
(4)	695 351 033 51	brake shoe oversize with pad 40 MM	/V/H	X	
5	695 351 311 06	brake pad 40 MM		X	
(5)	695 351 311 20	brake pad oversize 40 MM		X	
(5)	695 351 313 00	brake pad 60 MM		X	
6	695 351 511 00	wheel brake cylinder upper	/L	1	
(6)	E 695 351 511 10	wheel brake cylinder upper	/L	1	CARRERA 1600 GT
(6)	695 351 512 00	wheel brake cylinder upper	/R	1	
(6)	E 695 351 512 10	wheel brake cylinder upper	/R	1	CARRERA 1600 GT
7	251 609 289	concave washer		8	
8	E 644 42 208	compression spring		8	
9	356 42 169	roll pin		8	
10	E 356 42 168	return spring		6	
11	695 351 513 00	wheel brake cylinder lower	/L	1	
(11)	E 695 351 513 10	wheel brake cylinder lower	/L	1	CARRERA 1600 GT
(11)	695 351 514 00	wheel brake cylinder lower	/R	1	
(11)	E 695 351 514 10	wheel brake cylinder lower	/R	1	CARRERA 1600 GT
-	E 644 42 127	intermediate plate for wheel brake cylinder		1	CARRERA 1600 GT
12	695 351 011 02	supporting plate	/V/L	1	
(12)	E 695 351 011 10	supporting plate	/V/L	1	CARRERA 1600 GT
(12)	695 351 012 02	supporting plate	/V/R	1	
(12)	E 695 351 012 10	supporting plate	/V/R	1	CARRERA 1600 GT
13	900 027 014 01	lock ring B 6		16	
14	900 075 010 01	hexagon-head bolt M 6 X 12		16	
(14)	900 074 013 01	hexagon-head bolt M 6 X 22		16	CARRERA 1600 GT
15	E 900 075 035 02	hexagon-head bolt M 10 X 15 SK		4	
16	E 900 075 037 00	hexagon-head bolt M 10 X 17 SK		2	
16	900 075 039 02	hexagon-head bolt M 10 X 19 SK		X	
-	900 901 010 05	locking wire $1,2 X 10 M		*	
17	-	250MM		2	
18	695 331 061 01	brake drum	/H	2	
(18)	E 695 331 061 10	brake drum	/H	2	CARRERA 1600 GT
-	E 695 341 609 00	lock ring for brake drum		2	
19	644 352 513 01	wheel brake cylinder F >> 113 923 F >> 154 304 F >> 88 724	/H	2	COUPE -REUTTER- CABRIO HARDTOP ROADSTER
(19)	644 352 513 01	wheel brake cylinder F 113 924 >> F 154 305 >> F 88 725 >>	/H	2	COUPE -REUTTER CABRIO HARDTOP ROADSTER
20	E 695 352 011 02	supporting plate	/H/L	1	
(20)	E 695 352 011 10	supporting plate	/H/L	1	CARRERA 1600 GT
(20)	E 695 352 012 02	supporting plate	/H/R	1	
(20)	E 695 352 012 10	supporting plate	/H/R	1	CARRERA 1600 GT

Pos	Part Number	Name	Remarks	Qty	Model
21	900 027 014 01	lock ring B 6		8	
22	900 075 010 01	hexagon-head bolt M 6 X 12		8	
23	356 42 197	push rod	/L	1	
(23)	356 42 198	push rod	/R	1	
24	356 42 172	tension spring		4	
25	E 356 42 181	support	/H/L	1	
(25)	E 356 42 182	support	/H/R	1	
26	900 027 015 02	lock ring B 8		2	
27	900 075 025 01	hexagon-head bolt M 8 X 15		2	
28	900 076 025 02	hexagon nut M 8		2	
29	E 356 42 174	leaf spring		2	
30	E 900 027 010 00	lock ring B 3		4	
31	E 900 016 001 01	half-round screw AM 3 X 4		4	
32	356 42 173	adjusting nut		8	
33	356 42 114	adjusting screw		8	
34	E 356 42 147	lever	/H/L	1	
(34)	356 42 148	lever	/H/R	1	
35	356 42 207	pin		2	
36	356 42 209	spring washer $ 10,5/18 MM		2	
37	900 027 015 02	lock ring B 8		2	
38	900 076 025 02	hexagon nut M 8		2	
39	356 42 184	connecting tube		2	
-	E 550 42 336	union		4	CARRERA 1600 GT
		- -- E N D -- -			

Model	Year	MG	SG	Illustration	Restrictions	Update	13:11	27.10.2005	PORSCHE PET PORSCHE
356	65	6	02	602-05		194			

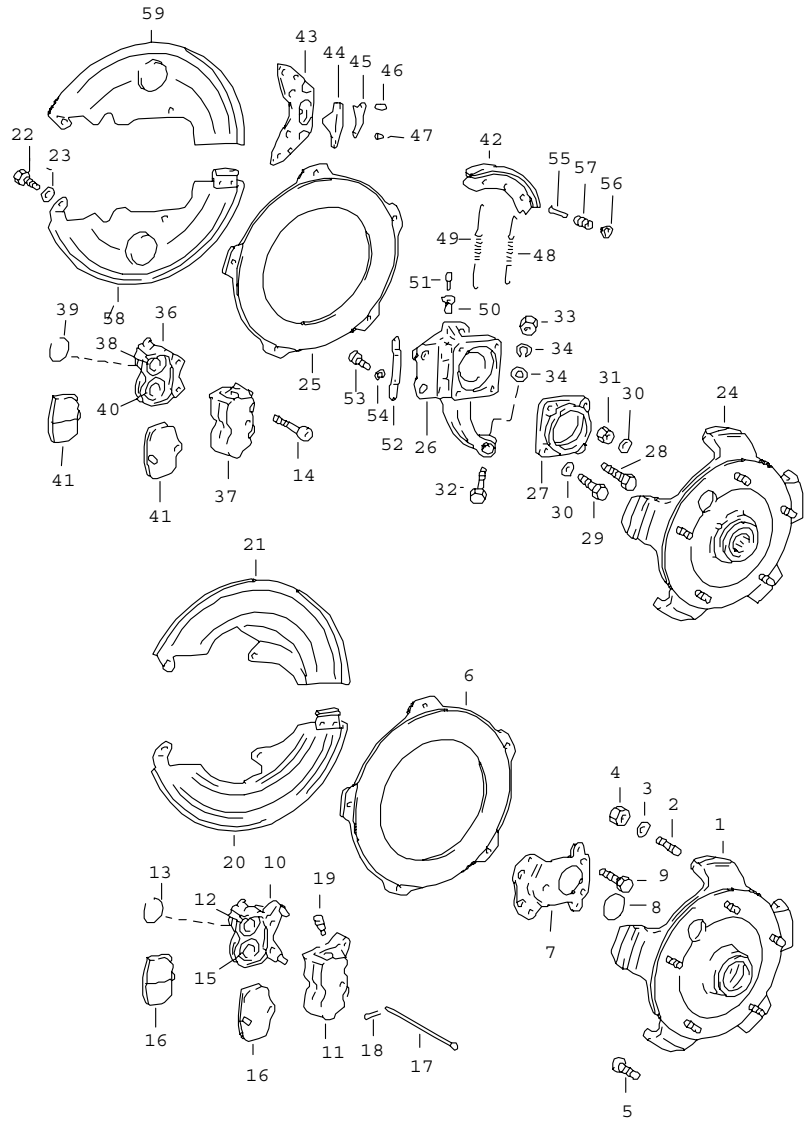

Pos	Part Number	Name	Remarks	Qty	Model
		brake	-63		CARRERA 2000
1	E 695 341 063 90	wheel hub	/V	2	
2	E 900 061 023 01	stud M 8 X 15		20	
3	E 900 028 004 01	spring washer A 8		20	
4	E 900 158 001 02	hexagon nut M 8		20	
5	356 34 132	wheel bolt		20	
(5)	E 356 331 902 00	wheel bolt oversize		X	
6	E 695 341 613 90	brake disc		2	
7	E 695 341 615 90	plate		2	
8	695 341 691 90	spacer 0,2 MM		X	
(8)	695 341 692 90	spacer 0,3 MM		X	
(8)	E 695 341 693 90	spacer 1,0 MM		X	
9	900 075 039 02	hexagon-head bolt M 10 X 19 SK		2	
9	E 900 075 037 00	hexagon-head bolt M 10 X 17 SK		4	
10	E 695 351 061 90	brake calliper half		2	
11	E 695 351 062 90	brake calliper half		2	
-	695 351 691 90	sealing ring for brake cylinder		8	
12	901 352 937 10	protection cap		8	
13	695 351 629 90	circlip		16	
14	E 900 119 008 02	pan-head screw M 14 X 1,5 X 60		8	
15	E 695 351 065 90	piston $ 33 MM		8	
-	695 351 628 90	spring front and rear		8	

Pos	Part Number	Name	Remarks	Qty	Model
-	E 900 227 001 00	grooved nail 2 X 6		8	
16	-	brake pad alternative parts:		X	
-	695 351 067 91	brake pad -TEXTAR 504-		4	
-	695 351 067 90	brake pad -FERODO DS 11-		4	
17	E 695 351 675 90	bolt		4	
18	N 012 521 1	cotter pin 2 X 20		4	
19	695 351 641 90	ventilation valve		4	
20	E 695 351 081 90	protective plate lower left and upper right	/V	2	
21	E 695 351 082 90	protective plate upper left and lower right	/V	2	
22	E 900 075 053 02	hexagon-head bolt M 8 X 10		16	
23	900 028 010 01	spring washer B 8		16	
24	E 695 331 063 90	wheel hub		2	
25	E 695 331 613 90	brake disc		2	
26	E 695 331 211 90	hub	/L	1	
(26)	E 695 331 212 90	hub	/R	1	
27	E 695 331 251 90	housing		2	
28	E 999 074 007 01	hexagon-head bolt		4	
29	E 999 074 006 01	fastening screw		4	
30	N 012 230 1	spring washer B 10		12	
31	N 011 010 6	hexagon nut M 10		4	
32	N 010 183 3	hexagon-head bolt M 12 X 1,5 X 75		2	
33	900 076 016 02	hexagon nut M 12 X 1,5		2	
34	900 027 017 02	lock ring B 12		2	
35	900 025 009 02	washer 13		2	
36	E 695 352 061 90	brake calliper half		2	
37	E 695 352 062 90	brake calliper half		2	
-	E 695 352 691 90	sealing ring for brake cylinder		8	
38	E 695 352 625 90	protection cap		8	
39	E 695 352 629 90	circlip		8	
40	E 695 352 065 90	piston $ 25 MM		8	
41	-	brake pad alternative parts:		X	
-	901 352 067 90	brake pad -TEXTAR 504-		4	
-	901 352 067 90	brake pad -FERODO DS 11-		4	
42	E 695 352 075 90	brake shoe with pad		4	
43	E 695 352 079 90	stop plate		2	
44	E 695 352 741 90	expanding bow		2	
45	E 695 352 743 90	lever		2	
46	E 695 352 745 90	bolt		2	
47	E 695 352 747 90	bolt		2	
48	E 695 352 735 90	return spring		2	
49	E 695 352 737 90	return spring		2	
50	E 695 352 781 90	adjusting nut		4	
51	E 695 352 783 90	adjusting screw		4	
52	E 695 352 785 90	leaf spring		2	

Pos	Part Number	Name	Remarks	Qty	Model
53	E 900 016 017 02	half-round screw AM 4 X 6		4	
54	900 027 011 01	lock ring B 4		4	
55	E 695 352 739 90	roll pin		4	
56	251 609 289	concave washer		4	
57	E 644 42 208	compression spring		4	
58	E 695 352 081 90	protective plate lower left and upper right	/H	2	
59	E 695 352 082 90	protective plate upper left and lower right	/H	2	
		- -- E N D -- -			

Model	Year	MG	SG	Illustration	Restrictions	Update	13:11	27.10.2005	PORSCHE PET PORSCHE
356	65	6	02	602-10		194			

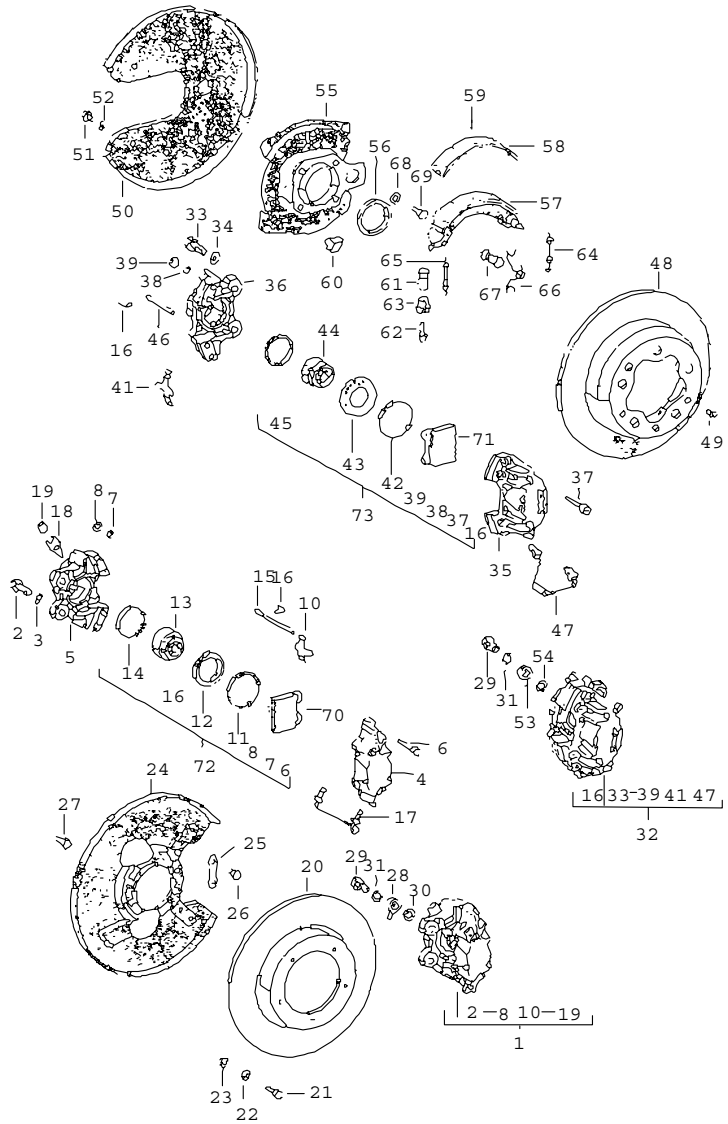

Pos	Part Number	Name	Remarks	Qty	Model
		brake	64-		356 C CARRERA 2000
1	E 901 351 965 10	fixed calliper without pad	/V/L	1	
(1)	E 901 351 966 10	fixed calliper without pad	/V/R	1	
2	900 082 006 01	hexagon-head bolt M 12 X 1,5 X 30		4	
3	900 028 014 01	spring washer B 12		4	
4	E 901 351 953 10	housing	/V	2	
5	E 901 351 951 10	housing with flange	/V	2	
6	E 900 067 058 01	pan-head screw M 8 X 50		8	
7	* 900 027 015 02	lock ring B 8		8	
8	* N 011 008 8	hexagon nut M 8		8	
10	* 901 351 916 12	expanding spring	/V	2	
11	E 901 351 917 10	clamping spring	/V	4	
12	* 901 351 918 10	protection cap	/V	4	
13	E 901 351 097 10	piston $ 48 MM	/V	4	
14	* 901 351 908 11	sealing ring	/V	4	
15	901 351 913 14	retaining pin	/V	4	
16	* 901 351 955 10	safety seal	/V/H	8	
17	E 901 351 925 10	connecting tube	/V	2	
18	695 351 641 90	ventilation valve	/V/H	8	
19	901 351 927 10	dust boot	/V/H	8	
20	901 351 401 10	brake disc		2	
21	900 075 079 02	hexagon-head bolt M 8 X 22		10	
22	900 028 010 01	spring washer B 8		20	

Pos	Part Number	Name	Remarks	Qty	Model
23	900 076 025 02	hexagon nut M 8		10	
24	E 695 351 081 10	protective plate	/V/L	1	
(24)	E 695 351 082 10	protective plate	/V/R	1	
25	695 351 811 00	tab washer		4	
26	900 075 080 02	hexagon-head bolt M 8 X 12		6	
27	900 075 079 02	hexagon-head bolt M 8 X 22		2	
(27)	E 900 075 081 02	hexagon-head bolt M 8 X 23		X	
(27)	E 900 075 082 02	hexagon-head bolt M 8 X 24		X	
(27)	900 075 083 02	hexagon-head bolt M 8 X 25		X	
28	695 351 532 00	socket piece	/V	2	
29	901 355 531 00	banjo bolt	/V/H	4	
30	E 901 351 956 10	sealing ring	/V	2	
31	900 123 005 20	sealing ring A 12 X 16	/V/H	4	
32	E 901 352 965 10	fixed calliper without pad	/H/L	1	
(32)	E 901 352 966 10	fixed calliper without pad	/H/R	1	
33	900 075 090 01	hexagon-head bolt M 10 X 25		4	
34	N 012 230 1	spring washer B 10		4	
35	E 901 352 903 10	housing	/H	2	
36	E 901 352 951 10	housing with flange	/H	2	
37	* N 044 703 2	screw M 6 X 45		8	
38	* 900 027 013 01	lock ring B 6		8	

Pos	Part Number	Name	Remarks	Qty	Model
39	* 900 076 023 01	hexagon nut M 6		8	
41	* 901 352 936 10	expanding spring	/H	2	
42	* 695 351 629 90	clamping spring	/H	4	
43	* 901 352 937 10	protection cap	/H	4	
44	E 901 352 099 10	piston $ 35 MM	/H	4	
45	E 901 352 908 10	sealing ring	/H	4	
46	901 352 938 11	pin	/H	4	
47	E 901 352 939 10	connecting tube	/H	2	
48	901 352 401 11	brake disc	/H	2	
49	900 013 024 02	countersunk-head screw AM 6 X 10		4	
50	E 695 352 801 10	protective plate	/H	2	
51	900 075 022 02	hexagon-head bolt M 8 X 8		8	
52	900 028 010 01	spring washer B 8		8	
53	914 355 531 00	socket piece	/H	2	
54	N 013 808 3	sealing ring A 10 X 16	/H	2	
55	E 695 352 013 10	supporting plate		2	
56	999 113 038 50	sealing ring A 44 X 58,4 X 10		2	
57	A 901 352 097 10	brake shoe with pad		4	
(57)	901 352 906 13	brake pad with pad		4	
59	E 901 352 952 10	rivet for 901.352.906.10		28	
60	E 901 352 941 10	retainer spring		4	
61	911 352 944 00	bush		2	
62	E 901 352 943 10	adjusting screw		2	
63	911 352 098 00	adjusting screw		2	

Pos	Part Number	Name	Remarks	Qty	Model	Pos	Part Number	Name	Remarks	Qty	Model
64	901 352 954 10	return spring	/H	2							
65	901 352 932 10	return spring	/V	2							
66	911 352 090 00	expanding bow		4							
67	901 352 953 10	compression spring		2							
68	900 028 010 01	spring washer B 8		8							
69	N 010 239 11	hexagon-head bolt M 8 X 18		8							
70	911 352 950 04	set of brake pads without mounting parts	/V	1							
71	911 352 939 01	set of brake pads without mounting parts	/H	1							
72	901 351 964 00	repair kit fixed calliper	/V	X							
73	901 352 964 11	repair kit fixed calliper	/H	X							
		- -- E N D -- -									

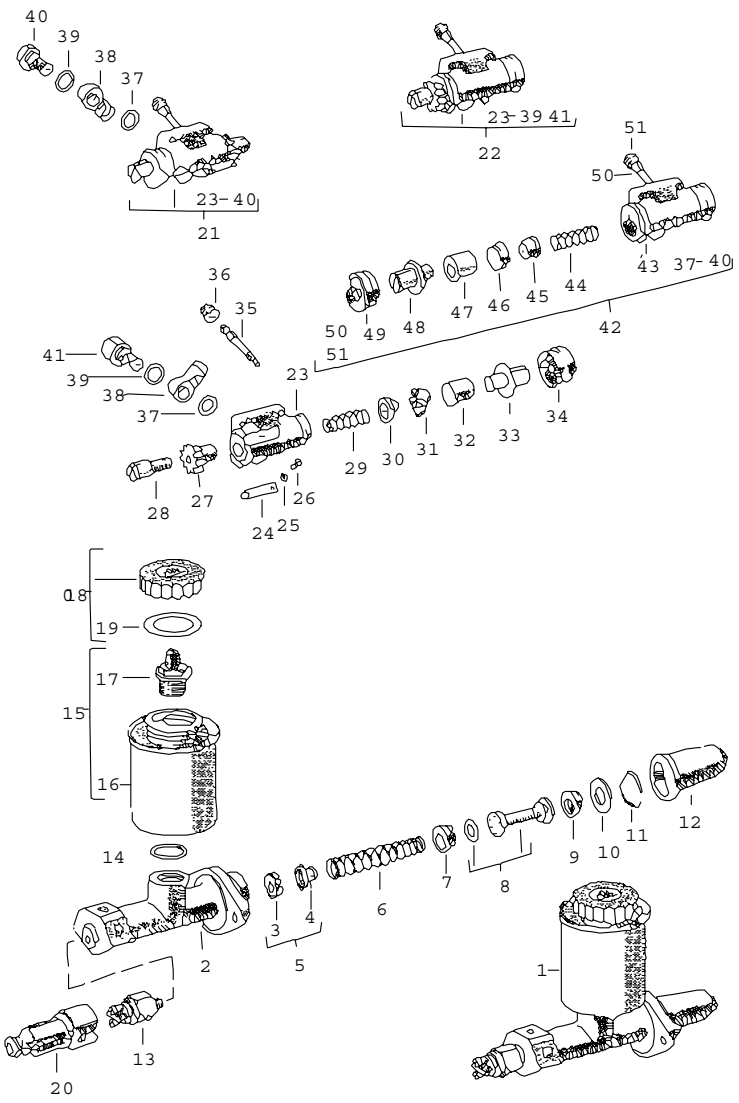

Pos	Part Number	Name	Remarks	Qty	Model
		wheel brake cylinder brake master cylinder			356 B 356 B CARRERA 2000
1	356 42 020	brake master cylinder $ 19,05 MM		1	356 B
(1)	E 695 351 501 90	brake master cylinder $ 19,05 MM		1	CARRERA 2000
2	356 42 401	housing		1	
3	356 42 402	valve seat ring		1	
4	356 42 403	valve		1	
5	E 356 42 403 1	valve		1	356 B
(5)	E 695 355 908 00	valve		1	CARRERA 2000
6	E 356 42 404	compression spring		1	
7	E 695 355 912 00	boot		1	
8	E 356 42 406	piston		1	
9	E 356 42 407	boot		1	
10	695 355 916 00	washer		1	
11	695 355 917 00	circlip		1	
12	E 695 355 920 00	protection cap		1	
13	901 613 401 00	alarm switch		1	
14	900 123 011 20	sealing ring		1	
15	356 42 091	expansion tank not available POS.1 356. 42.020 order		1	
16	E 356 42 411	container not available POS.1 356. 42.020 order		1	
17	E 356 42 412	union with strainer not available POS.1 356. 42.020 order		1	

Pos	Part Number	Name	Remarks	Qty	Model
18	477 611 361	cover		1	
19	E 356 42 415	rubber seal		1	
20	914 613 491 00	rubber cap		1	
21	695 351 511 00	wheel brake cylinder upper left	/V	1	
(21)	695 351 512 00	wheel brake cylinder upper right	/V	1	
22	695 351 513 00	wheel brake cylinder lower left	/V	1	
(22)	695 351 514 00	wheel brake cylinder lower right	/V	1	
(23)	E 695 351 515 00	housing upper left and lower right	/V	2	
23	E 695 351 516 00	housing lower left and upper right	/V	2	
24	E 695 351 517 00	leaf spring		4	
25	E 900 027 001 01	lock ring		4	
26	E 900 027 001 01	lock ring		4	
27	356 42 173	adjusting nut		4	
28	356 42 114	adjusting screw		4	
29	E 695 351 518 00	spring		4	
30	695 351 519 00	filler piece		4	
31	E 695 351 520 00	boot		4	
32	E 695 351 521 00	piston		4	
33	E 695 351 522 00	cam follower		4	
34	E 695 351 523 00	protection cap		4	
35	695 351 524 00	breather adapter		4	
36	901 351 927 10	dust boot		4	
37	N 013 808 3	sealing ring A 10 X 16		6	
38	914 355 531 00	socket piece		6	
39	900 123 005 20	sealing ring A 12 X 16		6	
40	901 355 531 00	banjo bolt upper left and upper right	/V/H	4	
41	695 351 534 00	banjo bolt lower left and lower right	/V	2	
42	644 352 513 01	wheel brake cylinder $ 19,05 MM F >> 113 923 F >> 154 304 F >> 88 724	/H	2	COUPE -REUTTER- CABRIO HARDTOP ROADSTER
42	644 352 513 01	wheel brake cylinder $ 19,05 MM F 113 924 >> F 154 305 >> F 88 725 >>	/H	2	COUPE -REUTTER CABRIO HARDTOP ROADSTER
43	644 352 515 01	housing		2	
44	E 644 352 518 01	spring		2	
45	695 351 519 00	filler piece		4	
46	E 695 351 520 00	boot		4	
47	E 695 351 521 00	piston		4	
48	E 695 351 522 00	cam follower		4	
49	E 695 351 523 00	protection cap		4	
50	695 351 524 00	breather adapter		2	
51	901 351 927 10	dust boot		2	

Pos	Part Number	Name	Remarks	Qty	Model	Pos	Part Number	Name	Remarks	Qty	Model
		- -- E N D -- -									

Model	Year	MG	SG	Illustration	Restrictions	Update	13:12	27.10.2005	PORSCHE PET PORSCHE
356	65	6	04	604-05		194			

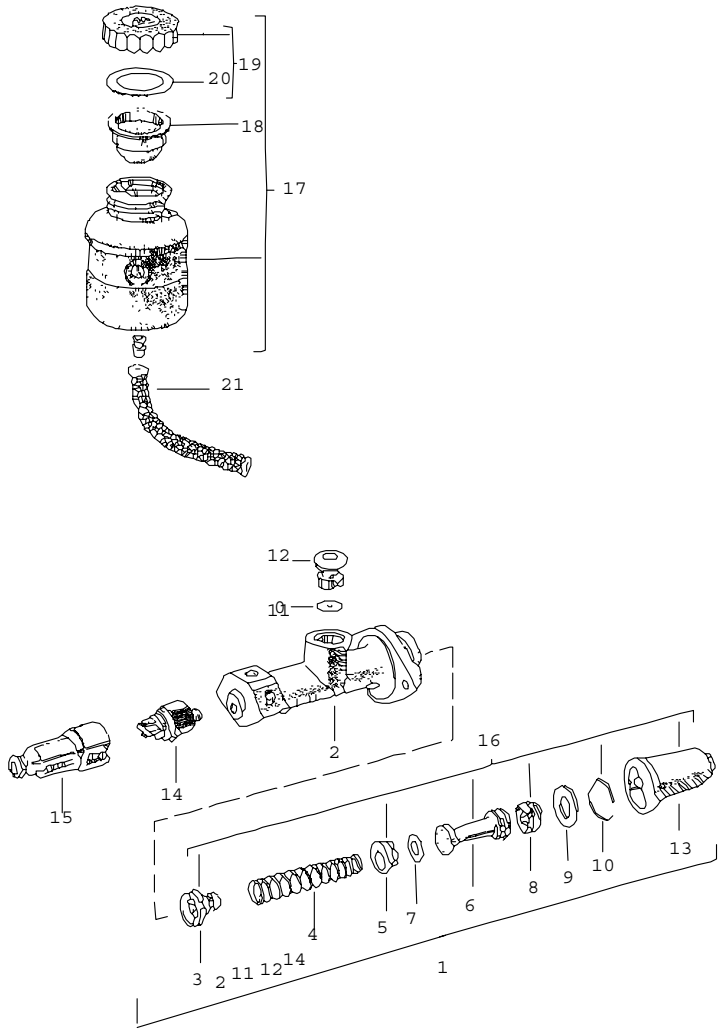

Pos	Part Number	Name	Remarks	Qty	Model
		brake master cylinder brake fluid reservoir			356 C
1	695 355 011 00	brake master cylinder		1	
2	E 695 355 907 00	housing		1	
3	E 695 355 908 00	valve		1	
4	E 695 355 909 00	compression spring		1	
5	E 695 355 912 00	boot		1	
6	E 695 355 914 00	piston		1	
7	E 695 355 913 00	shim		1	
8	* 695 355 915 00	boot		1	
9	695 355 916 00	washer		1	
10	* 695 355 917 00	circlip		1	
11	E 695 355 918 00	washer		1	
12	901 355 929 00	plug		1	
13	E 695 355 920 00	protection cap		1	
14	901 613 401 00	stop light switch		1	
15	914 613 491 00	rubber cap		1	
16	695 355 930 00	repair kit brake master cylinder		X	
17	695 355 013 00	expansion tank		1	
18	695 355 904 00	strainer		1	
19	477 611 361	cover		1	
20	E 356 42 415	gasket		1	
21	999 181 021 50	hose		1	
		- -- E N D -- -			

Model	Year	MG	SG	Illustration	Restrictions	Update	13:12	27.10.2005	PORSCHE	PET	PORSCHE
356	65	6	04	604-10		194					

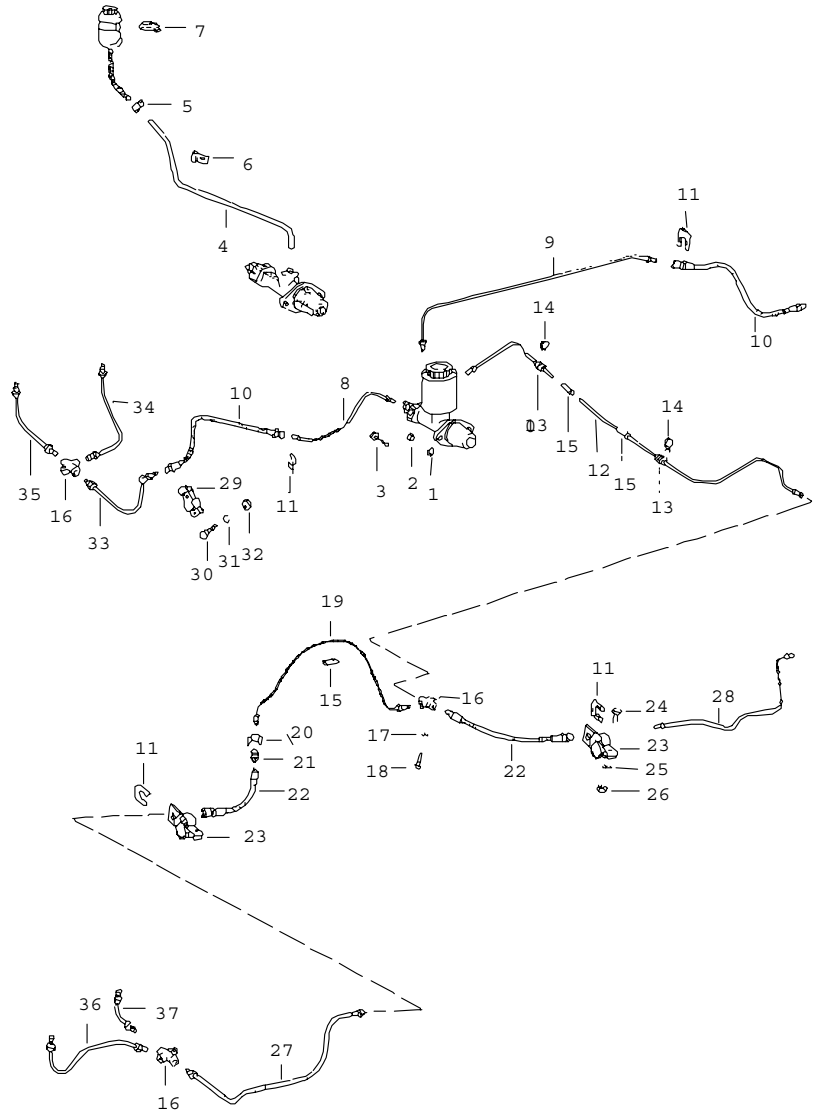

Pos	Part Number	Name	Remarks	Qty	Model
		brake lines	-63		356 B/C CARRERA 2000
1	900 027 015 02	lock ring B 8		2	
2	900 076 025 02	hexagon nut M 8		2	356 B
3	900 075 029 02	hexagon-head bolt M 8 X 25		2	CARRERA 2000 356 C
4	E 695 355 643 00	pipeline	/LL	1	356 C
(4)	E 695 355 644 00	pipeline	/RL	1	356 C
5	E 999 511 042 02	hose clamp S14/9ZY		1	356 C
6	999 511 041 02	clip		1	356 C
7	999 512 349 02	hose clamp		1	356 C
8	644 42 313	brake line	/LL/V/L	1	356 B CARRERA 2000
(8)	E 644 42 317	brake line	/RL/V/L	1	356 B
(8)	E 695 355 313 00	brake line	/V/L	1	356 C
9	644 42 314	brake line	/LL/V/R	1	356 B/C CARRERA 2000
(9)	E 644 42 318	brake line	/RL/V/R	1	356 B
(10)	644 42 311	brake hose	/V	2	356 B/C
10	901 355 632 01	brake hose		2	CARRERA 2000
11	914 355 665 00	brake hose bracket		4	
12	695 352 602 01	brake line 2150 MM	/LL	1	
(12)	E 695 352 604 01	brake line 2210 MM	/RL	1	356 B/C
13	914 355 651 00	rubber sleeve		2	
14	914 355 652 00	clamp		2	
15	914 355 691 00	protective tube		3	
(16)	914 355 667 00	distributor		1	356 B/C
16	914 355 667 00	distributor		5	CARRERA 2000

Pos	Part Number	Name	Remarks	Qty	Model
17	N 012 226 5	spring washer B 6		X	
18	900 074 014 01	hexagon-head bolt M 6 X 25		X	
19	695 352 601 00	brake line		1	
20	803 611 715	retainer spring		1	
21	914 355 661 00	intermediate piece		1	
22	695 352 631 00	brake hose	/H	2	
23	E 644 351 651 00	clip		2	
24	E 900 075 028 01	hexagon-head bolt M 8 X 22		2	
25	900 027 015 02	lock ring B 8		2	
26	900 076 025 02	hexagon nut M 8		2	
(27)	644 42 305	brake line F >> 113 923 F >> 154 304 F >> 88 724	/H/L	1	356 B COUPE -REUTER- CABRIO HARDTOP ROADSTER
(27)	695 352 605 00	brake line F 113 924 >> F 154 305 >> F 88 725 >>	/H/L	1	356 B COUPE -REUTTER- CABRIO HARDTOP ROADSTER
(27)	695 355 605 00	brake line	/H/L	1	356 C
27	E 695 352 683 90	brake line	/H/L	1	CARRERA 2000
28	E 644 42 306	brake line F >> 113 923 F >> 154 304 F >> 88 724	/H/R	1	356 B COUPE -REUTER- CABRIO HARDTOP ROADSTER
(28)	695 352 606 00	brake line F 113 924 >> F 154 305 >> F 88 725 >>	/H/R	1	356 B COUPE -REUTTER- CABRIO HARDTOP ROADSTER
(28)	695 355 606 00	brake line	/H/R	1	356 C
(28)	E 695 352 684 90	brake line	/H/R	1	CARRERA 2000
29	E 695 351 651 90	clip		2	CARRERA 2000
30	N 010 215 13	hexagon-head bolt M 6 X 15		2	CARRERA 2000
31	900 027 014 01	lock ring B 6		2	CARRERA 2000
32	900 076 010 02	hexagon nut M 6		2	CARRERA 2000
33	695 351 683 90	connecting line	/V/L	1	CARRERA 2000
(33)	E 695 351 684 90	connecting line	/V/R	1	CARRERA 2000
34	695 351 685 90	brake line brake cylinder outer	/V /L	1	CARRERA 2000
(34)	695 351 686 90	brake line brake cylinder outer	/V /R	1	CARRERA 2000
35	695 351 687 90	brake line brake cylinder inner	/V /L/R	2	CARRERA 2000
36	E 695 352 685 90	brake line brake cylinder outer	/H /L	1	CARRERA 2000
(36)	E 695 352 686 90	brake line brake cylinder outer	/H /R	1	CARRERA 2000
37	E 695 352 687 90	brake line brake cylinder inner	/H /L/R	2	CARRERA 2000

- -- E N D -- -

Model	Year	MG	SG	Illustration	Restrictions	Update		
356	65	6	98	REP		194	14:40	02.11.2005

Pos	Part Number	Name	Remarks	Qty	Model
		repair kits			
		front axle			
>>	> 911 352 950 04	set of brake pads without mounting parts		1	CARRERA 2000 1600 C/SC
>>	> 901 351 964 00	repair kit for fixed calliper comprising:		1	
		sealing ring		2	
		clamping spring		2	
		protection cap		2	
		safety seal		2	
		pan-head screw		4	
		lock ring		4	
		hexagon nut		4	
		rear axle			
>>	> 911 352 939 01	set of brake pads without mounting parts		1	CARRERA 2000 1600 C/SC
>>	> 901 352 964 11	repair kit for fixed calliper comprising:		1	
		sealing ring		2	
		clamping spring		2	
		protection cap		2	
		safety seal		2	
		pan-head screw		4	
		lock ring		4	
		hexagon nut		4	
		front axle and rear axle			
>>	> 695 355 930 00	repair kit brake master cylinder comprising:		1	356 C
		valve		1	
		boot		1	
		piston		1	
		boot		1	
		circlip		1	
		protection cap		1	
		- -- E N D -- -			

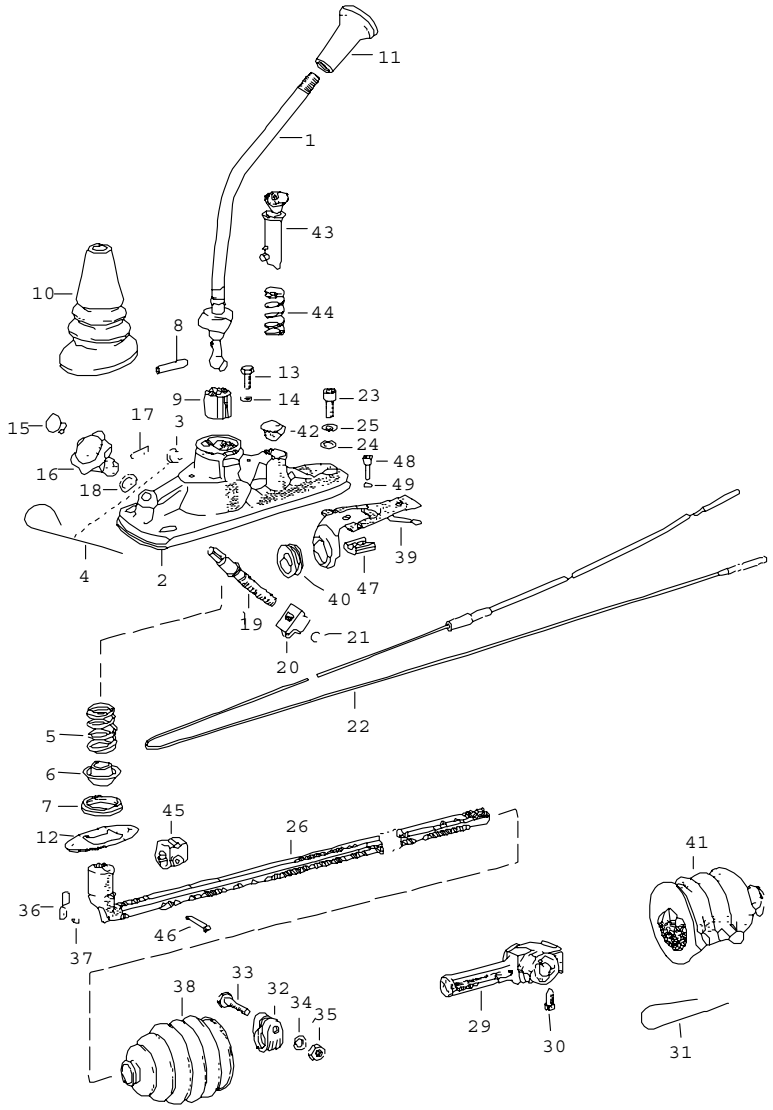

Pos	Part Number	Name	Remarks	Qty	Model
		transmission control			356 B
(1)	E 695 424 011 02	gearshift lever F >> 110 406 F >> 153 022 F >> 87 491		1	COUPE -REUTTER- CABRIO HARDTOP ROADSTER
1	E 695 424 011 03	gearshift lever use also: 695.424.015.01 F >> 110 406 F >> 153 022 F >> 87 491		1 1	COUPE -REUTTER- CABRIO HARDTOP ROADSTER
1	E 695 424 011 03	gearshift lever F 110 407 >> 117 600 F 153 023 >> 155 600 F 87 492 >> 89 600 G 35 001 >> 50 000	/LL	1	COUPE -REUTTER- CABRIO HARDTOP ROADSTER
1	E 695 424 011 06	gearshift lever F 117 601 >> F 155 601 >> F 89 601 >> G 50 001 >>	/LL	1	COUPE -REUTTER- CABRIO HARDTOP ROADSTER
1	A 695 424 011 05	gearshift lever F 117 601 >> F 155 601 >> F 89 601 >> G 50 001 >>	/LL	1	COUPE -REUTTER- CABRIO HARDTOP ROADSTER
(1)	E 695 424 012 00	gearshift lever F 110 407 >> 117 600 F 153 023 >> 155 600 F 87 492 >> 89 600 G 35 001 >> 50 000	/RL	1	COUPE -REUTTER- CABRIO HARDTOP ROADSTER
(1)	695 424 012 03	gearshift lever F 117 601 >> F 155 601 >> F 89 601 >> G 50 001 >>	/RL	1	COUPE -REUTTER- CABRIO HARDTOP ROADSTER

Pos	Part Number	Name	Remarks	Qty	Model
(1)	E 695 424 012 02	gearshift lever F 117 601 >> F 155 601 >> F 89 601 >> G 50 001 >>	/RL	1	COUPE -REUTTER- CABRIO HARDTOP ROADSTER
(2)	E 695 424 151 02	gearshift bracket F >> 110 406 F >> 153 022 F >> 87 491		1	COUPE -REUTTER- CABRIO HARDTOP ROADSTER
(2)	E 695 424 153 00	gearshift bracket F 108 918 >> 110 406 F 152 476 >> 153 022 F 86 831 >> 87 491		1	COUPE -REUTTER- CABRIO HARDTOP ROADSTER
(2)	E 695 424 153 00	gearshift bracket F 110 407 >> 117 600 F 153 023 >> 155 600 F 87 492 >> 89 600 G 35 001 >> 50 000		1	COUPE -REUTTER- CABRIO HARDTOP ROADSTER
2	695 424 153 02	gearshift bracket F 117 601 >> F 155 601 >> F 89 601 >> G 50 001 >>		1	COUPE -REUTTER- CABRIO HARDTOP ROADSTER
(2)	E 695 424 153 12	gearshift bracket F 117 601 >> F 155 601 >> F 89 601 >> G 50 001 >>		1	CARRERA 2 COUPE -REUTTER- CABRIO HARDTOP ROADSTER
3	695 424 171 01	guide pin F 117 601 >> F 155 601 >> F 89 601 >> G 50 001 >>		1	COUPE -REUTTER- CABRIO HARDTOP ROADSTER
4	695 424 173 01	retaining spring F 117 601 >> F 155 601 >> F 89 601 >> G 50 001 >>		1	COUPE -REUTTER- CABRIO HARDTOP ROADSTER
5	695 424 131 00	compression spring		1	
(5)	695 424 131 01	compression spring for 695.424.011.05 695.424.012.02		1 1 1	
6	695 424 133 00	ball socket		1	
-	695 424 132 00	guide for 695.424.011.05 695.424.012.02		1 1 1	
7	695 424 135 00	ball socket		1	
8	E 900 095 022 00	roll pin 6 X 32		1	
9	695 424 110 00	ball socket F 117 601 >> F 155 601 >> F 89 601 >> G 50 001 >>		1	COUPE -REUTTER- CABRIO HARDTOP ROADSTER
10	914 424 901 00	sealing sleeve		1	
11	695 424 191 00	gearshift knob		1	
12	E 695 424 015 01	stop plate		1	
13	E 900 075 011 01	hexagon-head bolt M 6 X 15		2	
14	900 028 003 01	spring washer A 6		2	
15	E 695 424 252 00	cap F 117 601 >> F 155 601 >> F 89 601 >> G 50 001 >>		1	COUPE -REUTTER- CABRIO HARDTOP ROADSTER
16	695 424 791 00	rotary knob		1	
16	644 424 791 00	rotary knob		1	

Pos	Part Number	Name	Remarks	Qty	Model
17	900 197 010 00	dowel pin 3 X 22		1	
18	356 42 209	spring washer		1	
19	E 695 424 715 00	shaft		1	
20	E 695 424 717 00	nut		1	
(21)	E 900 152 002 00	snap ring 10 F >> 117 600 F >> 155 600 F >> 89 600 G >> 50 000		1	COUPE -REUTTER- CABRIO HARDTOP ROADSTER
21	900 116 005 02	lock washer 7 F 117 601 >> F 155 601 >> F 89 601 >> G 50 001 >>		1	COUPE -REUTTER- CABRIO HARDTOP ROADSTER
22	--- --- --- --	see group 2/02/10		1	
23	N 014 712 3	hexagon socket head bolt M 8 X 18		3	
24	900 031 001 02	washer 8,4		3	
25	999 523 102 02	shake-proof washer 8,4 F >> 110 406 F >> 153 022 F >> 87 491		3	COUPE -REUTTER- CABRIO HARDTOP ROADSTER
25	E 695 424 159 00	washer F 110 407 >> F 153 023 >> F 87 492 >> G 35 001 >>		3	COUPE -REUTTER- CABRIO HARDTOP ROADSTER
(26)	E 695 424 021 01	gear shift rod F >> 110 406 F >> 153 022 F >> 87 491		1	COUPE -REUTTER- CABRIO HARDTOP ROADSTER
26	E 695 424 020 03	gear shift rod F 110 407 >> 117 600 F 153 023 >> 155 600 F 87 492 >> 89 600 G 35 001 >> 50 000		1	COUPE -REUTTER- CABRIO HARDTOP ROADSTER
26	E 695 424 021 04	gear shift rod F 117 601 >> F 155 601 >> F 89 601 >> G 50 001 >>		1	COUPE -REUTTER- CABRIO HARDTOP ROADSTER
29	695 424 024 05	shift rod coupling F >> 110 406 F >> 153 022 F >> 87 491		1	COUPE -REUTTER- CABRIO HARDTOP ROADSTER
29	695 424 024 04	shift rod coupling F 110 407 >> F 153 023 >> F 87 492 >> G 35 001 >>		1	COUPE -REUTTER- CABRIO HARDTOP ROADSTER
30	111 711 189	adjusting screw		2	
31	900 901 010 05	locking wire 1,2 X 100		2	
32	914 424 214 00	clamp		1	
33	N 040 222 2	hexagon-head bolt M 8 X 32		1	
34	999 523 102 02	lock washer M 8		1	
35	900 076 025 02	hexagon nut M 8		1	
36	E 695 424 208 00	spring F >> 117 600 F >> 155 600 F >> 89 600 G >> 50 000		1	COUPE -REUTTER- CABRIO HARDTOP ROADSTER

Pos	Part Number	Name	Remarks	Qty	Model
37	E 900 055 008 00	rivet 3,5 X 12 F >> 117 600 F >> 155 600 F >> 89 600 G >> 50 000		1	COUPE -REUTTER- CABRIO HARDTOP ROADSTER
38	695 424 922 00	sealing sleeve		1	
(39)	E 695 424 023 01	guide F >> 110 406 F >> 153 022 F >> 87 491		1	COUPE -REUTTER- CABRIO HARDTOP ROADSTER
39	E 695 424 023 02	guide F 110 407 >> F 153 023 >> F 87 492 >> G 35 001 >>		1	COUPE -REUTTER- CABRIO HARDTOP ROADSTER
40	695 424 211 00	friction ring F >> 110 406 F >> 153 022 F >> 87 491		1	COUPE -REUTTER- CABRIO HARDTOP ROADSTER
40	695 424 211 01	friction ring F 110 407 >> F 153 023 >> F 87 492 >> G 35 001 >>		1	COUPE -REUTTER- CABRIO HARDTOP ROADSTER
41	PCG 424 921 02	sleeve F >> 110 406 F >> 153 022 F >> 87 491		1	COUPE -REUTTER- CABRIO HARDTOP ROADSTER
41	695 424 921 03	sealing sleeve F 110 407 >> F 153 023 >> F 87 492 >> G 35 001 >>		1	COUPE -REUTTER- CABRIO HARDTOP ROADSTER
42	695 424 251 01	cap F 110 407 >> F 153 023 >> F 87 492 >> G 35 001 >>		1	COUPE -REUTTER- CABRIO HARDTOP ROADSTER
43	695 424 245 01	lock F 108 918 >> 110 406 F 152 476 >> 153 022 F 86 831 >> 87 491		1	COUPE -REUTTER- CABRIO HARDTOP ROADSTER
43	695 424 245 01	lock F 110 407 >> F 153 023 >> F 87 492 >> G 35 001 >>		1	COUPE -REUTTER- CABRIO HARDTOP ROADSTER
-	E 644 424 952 01	key F 110 407 >> F 153 023 >> F 87 492 >> G 35 001 >>		1	COUPE -REUTTER- CABRIO HARDTOP ROADSTER
-	E 644 424 952 10	blank key F 110 407 >> 117 600 F 153 023 >> 155 600 F 87 492 >> 89 600 G 35 001 >> 50 000		1	COUPE -REUTTER- CABRIO HARDTOP ROADSTER
-	E 644 424 952 11	blank key F 117 601 >> F 155 601 >> F 89 601 >> G 50 001 >>		1	COUPE -REUTTER- CABRIO HARDTOP ROADSTER
44	695 424 231 00	compression spring F 108 918 >> 117 600 F 152 476 >> 155 600 F 86 831 >> 89 600 G >> 50 000		1	COUPE -REUTTER- CABRIO HARDTOP ROADSTER

Pos	Part Number	Name	Remarks	Qty	Model
44	695 424 231 01	compression spring F 117 601 >> F 155 601 >> F 89 601 >> G 50 001 >>		1	COUPE -REUTTER- CABRIO HARDTOP ROADSTER
45	695 424 206 00	detent F 108 918 >> 117 600 F 152 476 >> 155 600 F 86 831 >> 89 600 G >> 50 000		1	COUPE -REUTTER- CABRIO HARDTOP ROADSTER
45	695 424 206 00	detent F 117 601 >> F 155 601 >> F 89 601 >> G 50 001 >>		1	COUPE -REUTTER- CABRIO HARDTOP ROADSTER
46	E 900 095 022 00	roll pin 6 X 32 F 110 407 >> F 153 023 >> F 87 492 >> G 35 001 >>		1	COUPE -REUTTER- CABRIO HARDTOP ROADSTER
47	695 424 213 00	support F 108 918 >> F 152 476 >> F 86 831 >>		1	COUPE -REUTTER- CABRIO HARDTOP ROADSTER
48	E 900 067 010 01	hexagon socket head bolt M 6 X 18 F 108 918 >> 110 406 F 152 476 >> 153 022 F 86 831 >> 87 491		2	COUPE -REUTTER- CABRIO HARDTOP ROADSTER
48	900 067 010 00	hexagon socket head bolt M 6 X 18 F 110 407 >> F 153 023 >> F 87 492 >> G 35 001 >>		1	COUPE -REUTTER- CABRIO HARDTOP ROADSTER
49	N 012 026 3	lock ring 6 - -- E N D -- -		2	

Model	Year	MG	SG	Illustration	Restrictions	Update	13:13	27.10.2005	PORSCHE PET PORSCHE
356	65	7	01	701-05		194			

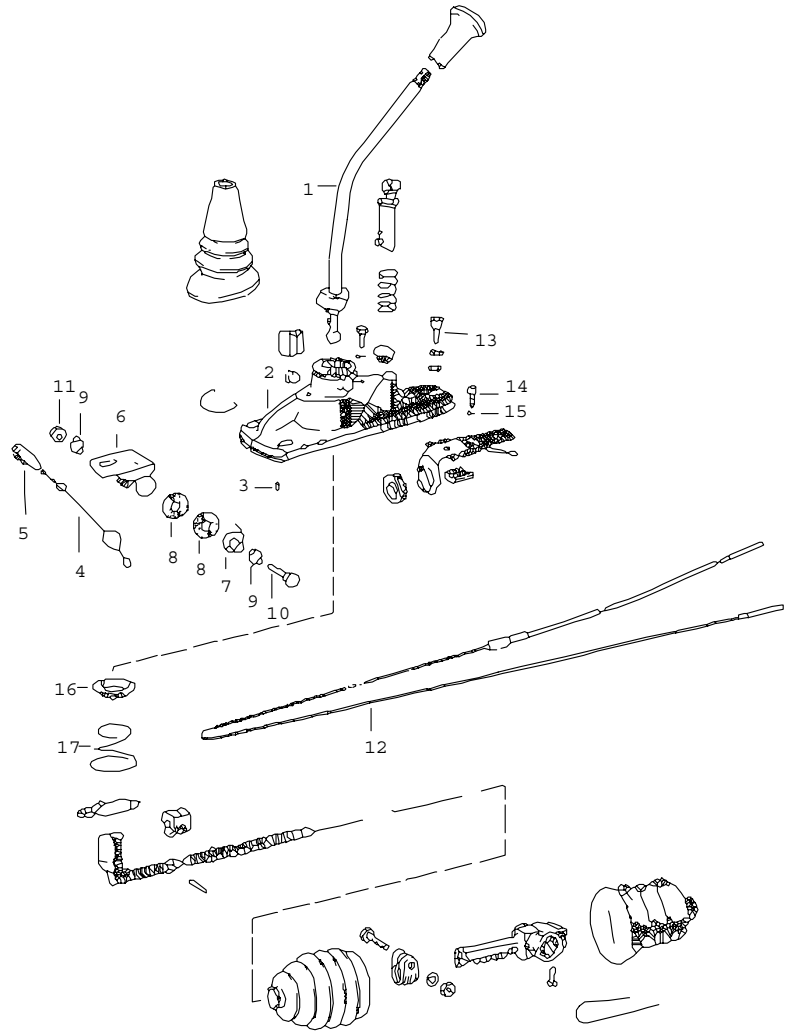

Pos	Part Number	Name	Remarks	Qty	Model
		transmission control			356 C
		see group 7/01/00			
1	E 695 424 011 06	gearshift lever	/LL	1	
(1)	695 424 012 03	gearshift lever	/RL	1	
2	695 424 153 03	gearshift bracket		1	
(2)	E 695 424 153 12	gearshift bracket		1	CARRERA 2
3	E 900 185 003 00	dowel pin 5 X 10		1	
4	E 695 424 721 05	lever	/LL	1	
(4)	E 695 424 721 06	lever	/RL	1	
5	695 424 792 00	handle		1	
6	E 695 424 723 02	bearing		1	
7	695 424 735 00	lamina		1	
8	695 424 737 00	washer		2	
9	999 523 006 00	cup spring		2	
10	E 900 074 131 02	hexagon-head bolt M 8 X 28		1	
11	999 090 004 02	hexagon nut M 8		1	
12	--- --- --- --	see group 2/02/10		1	
13	900 067 057 02	pan-head screw M 8 X 20		3	
14	900 067 011 02	pan-head screw M 6 X 20		2	
15	900 031 001 02	washer 8,4		2	
16	695 424 132 00	guide		1	
17	695 424 131 01	compression spring		1	
		- -- E N D -- -			

Model	Year	MG	SG	Illustration	Restrictions	Update			
356	65	7	01	701-20		194	13:13	27.10.2005	PORSCHE PET PORSCHE

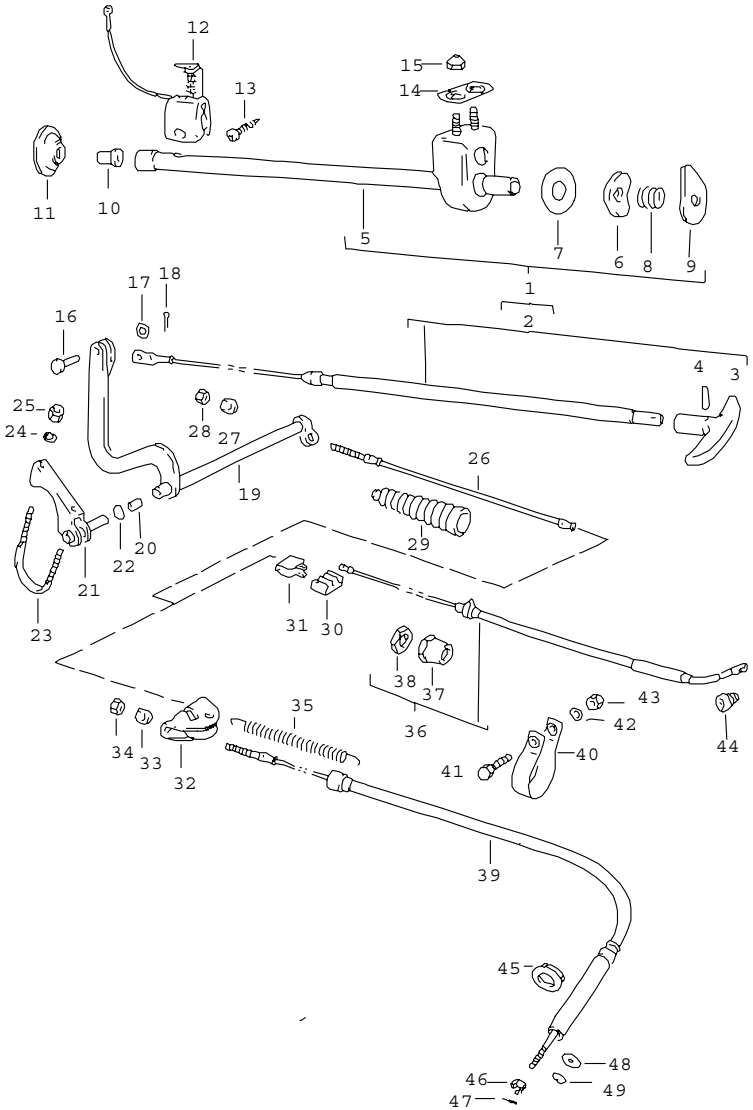

Pos	Part Number	Name	Remarks	Qty	Model
		handbrake	-63		356B/C CARRERA 2000
(1)	E 644 24 023	parking-brake cable complete	/LL	1	356 B
1	E 695 424 017 01	parking-brake cable complete	/LL	1	356 C
(1)	E 644 24 024	parking-brake cable complete	/RL	1	356 B
(1)	E 695 424 018 01	parking-brake cable complete	/RL	1	356 C
(2)	644 24 025	parking-brake cable	/LL	1	356 B
2	E 695 424 059 00	parking-brake cable	/LL	1	356 C
(2)	E 644 24 026	parking-brake cable	/RL	1	356 B
(2)	E 695 424 060 00	parking-brake cable	/RL	1	356 C
-	E 644 501 921 00	intermediate piece	/LL	1	(I)
3	E 644 24 215	pull handle		1	
4	900 095 001 00	roll pin 2 X 14		1	
(5)	E 644 24 027	guide tube		1	356 B
5	E 695 424 019 00	guide tube	/LL	1	356 C
(5)	695 424 026 00	guide tube	/RL	1	356 C
6	644 24 228	locking piece		1	
7	644 24 233	washer		1	
8	644 24 229	compression spring		1	
9	E 644 24 231	locking segment	/LL	1	
(9)	E 644 24 232	locking segment	/RL	1	
(10)	E 644 24 241	thrust ring		1	356 B-T5
10	E 695 424 224 00	guide bush		1	356 C
11	644 24 216	rubber ring		1	
12	E 644 613 053 00	switch		1	356 C
13	900 145 001 02	rais. counters. h. tap. s.		1	356 C
14	E 695 424 781 00	plate		1	

Pos	Part Number	Name	Remarks	Qty	Model
15	999 084 103 02	hexagon nut M 6 SNM		2	
16	E 900 088 001 02	bolt 5 H 11 X 18 X 15		1	
17	900 025 003 02	washer 5,3		1	
18	E 900 021 001 00	cotter pin 1,5 X 8		1	
19	695 424 057 00	lever	/LL	1	
(19)	E 695 424 058 00	lever	/RL	1	
20	E 644 24 207	bush		2	
21	E 644 24 021	bearing bracket	/LL	1	
21	E 644 24 021 1	bearing bracket	/RL	1	
22	E 000 97 310	o-ring		2	
23	E 644 24 206	clip		1	
24	900 027 014 01	lock ring B 6		2	
25	900 076 010 02	hexagon nut M 6		2	
26	644 24 208	parking-brake cable		1	356 B/C
(26)	E 695 424 601 90	parking-brake cable		1	CARRERA 2000
27	356 23 213	adjusting nut		1	
28	900 076 010 02	hexagon nut M6		1	
29	356 23 204	sealing bellows		1	
30	E 356 24 308	connecting piece		1	356 B CARRERA 2000
31	E 356 24 309	clip		1	356 B CARRERA 2000
32	E 695 424 567 00	compensating piece		1	356 C
33	356 23 213	sealing bellows		2	356 C
34	900 076 010 02	hexagon nut M 6		2	356 C
35	E 644 424 531 00	return spring		1	
36	644 24 238	parking-brake cable		2	356 B
(36)	695 352 751 90	parking-brake cable		2	CARRERA 2000
37	644 424 575 01	sleeve 10 MM		2	356 B CARRERA 2000
(37)	644 424 575 01	sleeve 18 MM		X	356 B CARRERA 2000
38	E 644 424 571 00	lock nut		2	356 B CARRERA 2000
39	695 424 603 00	parking-brake cable		2	356 C
40	999 706 005 80	suspension strap		2	
41	E 900 075 011 01	hexagon-head bolt M 6 X 15		2	
42	N 012 226 5	spring washer B 6		2	
43	900 076 010 02	hexagon nut M 6		2	
44	356 23 204	sealing sleeve		2	CARRERA 2000
45	695 424 611 00	friction ring		2	356 C
46	900 079 012 02	castle nut M 6		2	356 C
47	N 012 507 1	cotter pin 1,5 X 15		2	356 C
48	900 151 006 09	washer B 6,4		2	356 C
49	N 011 524 7	washer 6,4		X	356 C

- -- E N D -- -

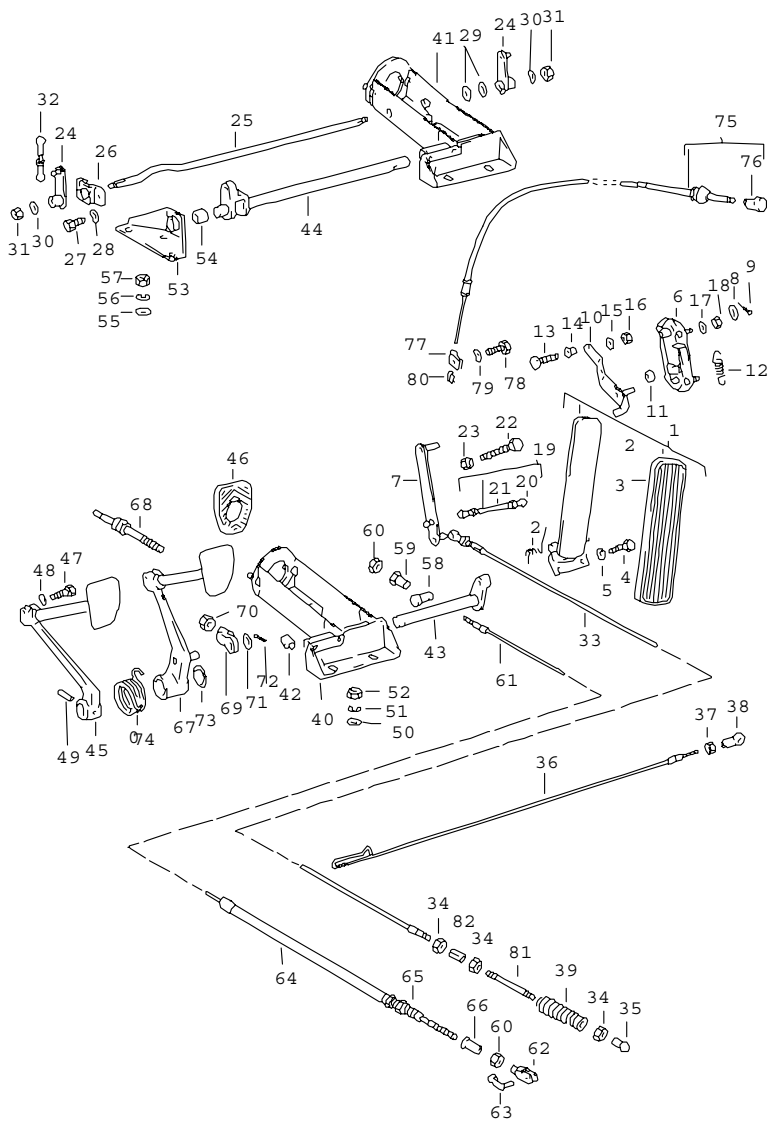

Pos	Part Number	Name	Remarks	Qty	Model
		pedals			
1	644 23 011	accelerator pedal		1	
2	644 23 131	spring		1	
3	356 23 326	rubber pad		1	
4	E 900 075 011 01	hexagon-head bolt M 6 X 15		2	
-	N 011 524 7	washer 6,4		2	
5	N 012 226 5	spring washer B 6		2	
6	644 23 128	bearing plate		1	356 B-T5
(6)	E 695 423 020 00	bearing plate		1	356 B-T6 356 C COUPE -REUTTER- COUPE -KARMANN- CABRIO HARDTOP
		F 121 501 >>			
		F 211 430 >>			
		F 157 201 >>			
7	E 644 23 010	lever		1	
8	900 025 007 02	washer 8,4		2	
9	N 012 512 1	cotter pin 2 X 12		2	
10	644 24 052	lever		1	
11	E 644 23 147	rubber stop		1	
12	644 24 508	tension spring		1	
13	E 644 24 509	clamping screw		1	
14	E 644 24 510	clamping sleeve		1	
15	900 025 002 02	washer 4,3		1	
16	N 011 004 6	hexagon nut M 4		1	
17	900 027 014 01	lock ring B 6		4	
18	900 076 010 02	hexagon nut M 6		4	

Pos	Part Number	Name	Remarks	Qty	Model
19	644 23 016	push rod	/LL	1	
(19)	E 644 23 134	push rod	/RL	1	
20	N 015 521 3	ball socket A 8		2	
21	N 011 005 14	hexagon nut M 5		2	
22	E 900 075 020 01	stop screw M 6 X 45		1	356 B-T5
22	E 900 075 052 01	stop screw M 6 X 50		1	356 B-T6 356 C
23	900 076 010 02	hexagon nut M 6		1	
24	E 356 23 070	lever	/RL	2	
25	E 644 23 137	shaft	/RL	1	
26	E 644 23 139	supporting bow	/RL	1	
27	900 075 010 01	hexagon-head bolt M 6 X 12	/RL	2	
28	N 012 226 5	spring washer B 6	/RL	2	
29	911 423 225 00	washer	/RL	3	
30	N 012 226 5	spring washer B 6	/RL	2	
31	900 076 010 02	hexagon nut M 6	/RL	2	
32	E 644 23 142	pull rod	/RL	2	
33	PCG 423 014 00	throttle linkage	/V	1	
34	900 076 005 02	hexagon nut M 5		4	
35	N 015 521 3	ball socket A 8		2	
36	695 423 016 00	throttle linkage F >> 110 406 F >> 153 022 F >> 87 491	/H	1	356 B-T5 COUPE -REUTTER- CABRIO HARDTOP ROADSTER
(36)	695 423 016 01	throttle linkage F 110 407 >> F 153 023 >> F 87 492 >>	/H	1	356 B-T5 COUPE -REUTTER- CABRIO HARDTOP ROADSTER
36	695 423 016 10	throttle linkage	/H -61	1	CARRERA
(36)	695 423 016 11	throttle linkage	/H -61	1	CARRERA: 692/3A
(36)	695 423 016 11	throttle linkage	/H	1	CARRERA 2
36	695 423 016 02	throttle linkage	/H	1	356 B-T6 356 C
37	900 076 005 02	hexagon nut M 5		1	
38	N 015 521 3	ball socket A 8		1	
39	356 23 204	sealing sleeve		1	
40	E 644 23 033	bearing bracket	/LL	1	
-	E 644 423 556 00	bearing sleeve	/LL	2	
-	E 644 423 556 00	bearing sleeve	/RL	1	
41	E 644 23 035	bearing bracket	/RL	1	
42	E 644 23 310	rubber stop		2	
43	E 644 23 022	clutch pedal shaft	/LL	1	356 B-T5
(43)	E 695 423 043 00	clutch pedal shaft F 120 623 >> F 210 693 >> F 153 898 >>	/LL	1	356 B-T6 356 C COUPE -REUTTER- COUPE -KARMANN- CABRIO HARDTOP
44	E 644 23 221	clutch pedal shaft	/RL	1	356 B-T5
(44)	E 695 423 044 00	clutch pedal shaft F 120 623 >> F 210 693 >> F 153 898 >>	/RL	1	356 B-T6 356 C COUPE -REUTTER- COUPE -KARMANN- CABRIO HARDTOP

Pos	Part Number	Name	Remarks	Qty	Model
45	E 644 23 025	clutch pedal stop see group 8/07/00 picture 31		1	
46	914 423 210 00	rubber pad		2	
47	900 075 029 09	hexagon-head bolt M 8 X 25		2	
48	N 012 241 8	spring washer B 8		2	
49	E 999 095 001 00	spiral clamping pin S 6 X 32		1	
50	900 025 007 02	washer 8,4		3	
51	900 027 015 02	lock ring B 8		3	
52	900 076 025 02	hexagon nut M 8		3	
53	E 644 23 225	bearing bracket	/RL	1	
54	E 644 423 556 00	bearing sleeve	/RL	1	
55	900 025 007 02	washer 8,4	/RL	3	
56	900 027 015 02	lock ring B 8	/RL	3	
57	900 076 025 02	hexagon nut M 8	/RL	3	
58	644 23 219	bolt		1	356 B-T5
(58)	695 423 405 00	bolt F 120 623 >> F 210 693 >> F 153 898 >>		1	356 B-T6 356 C COUPE -REUTTER- COUPE -KARMANN- CABRIO HARDTOP
59	644 23 220	adjusting nut		1	356 B-T5

Pos	Part Number	Name	Remarks	Qty	Model
(59)	695 423 407 00	adjusting nut F 120 623 >> F 210 693 >> F 153 898 >>		1	356 B-T6 356 C COUPE -REUTTER- COUPE -KARMANN- CABRIO HARDTOP
60	900 076 010 02	hexagon nut M 6		2	356 B-T5
(60)	N 011 007 3	hexagon nut M 7 F 120 623 >> F 210 693 >> F 153 898 >>		1	356 B-T6 356 C COUPE -REUTTER- COUPE -KARMANN- CABRIO HARDTOP
61	644 423 401 00	clutch cable		1	356 B-T5
(61)	644 423 401 01	clutch cable F 120 623 >> F 210 693 >> F 153 898 >>		1	356 B-T6 356 C COUPE -REUTTER- COUPE -KARMANN- CABRIO HARDTOP
62	900 166 002 02	clevis G 6 X 24		1	
63	999 166 001 02	bolt		1	
64	695 423 421 01	hose		1	
65	E 900 084 005 02	nut		1	
66	695 423 922 00	sleeve		1	356 B-T5
(66)	695 423 922 00	seal F 120 623 >> F 210 693 >> F 153 898 >>		1	356 B-T6 356 C COUPE -REUTTER- COUPE -KARMANN- CABRIO HARDTOP
67	E 644 23 030	brake pedal		1	
-	E 644 23 303	bearing sleeve		2	
68	E 356 42 029	piston rod		1	

Pos	Part Number	Name	Remarks	Qty	Model
69	E 356 23 317	intermediate piece		1	
70	900 034 003 02	hexagon nut B M 10		1	
71	E 900 031 002 00	washer 13		1	
72	900 021 015 00	cotter pin 3 X 20		1	
73	000 95 710	washer		1	
74	E 644 23 305	return spring		1	
75	E 695 424 031 00	accelerator cable		1	356 B-T5
(75)	E 644 24 053	accelerator cable		1	ROADSTER
(75)	E 695 424 031 02	accelerator cable		1	356 B-T6 356 C
-	E 695 424 361 00	bowden cable	/LL	1	356 B-T6 356 C
-	E 695 424 362 00	bowden cable	/RL	1	356 B-T6 356 C
-	E 695 424 331 00	guide tube	/LL	1	356 B-T6 356 C
-	E 695 424 332 00	guide tube	/RL	1	356 B-T6 356 C
76	644 552 820 04	knob		1	
77	E 356 49 648	clamp "S" 8 MM		1	
78	900 075 003 01	hexagon-head bolt M 5 X 10		1	
79	N 012 225 2	spring washer B 5		1	
80	E 644 24 511	clamping piece		1	356 B-T5
(80)	E 695 424 381 00	screw nipple		2	356 B-T6 356 C
81	695 423 133 00	extension F 110 407 >> F 153 023 >> F 87 492 >>		1	356 B-T5 COUPE -REUTTER- CABRIO HARDTOP ROADSTER
(81)	695 423 133 01	extension		1	356 B-T6 356 C
82	911 423 081 02	connecting piece F 110 407 >> F 153 023 >> F 87 492 >>		1	356 B-T5 COUPE -REUTTER- CABRIO HARDTOP ROADSTER
(82)	911 423 081 02	connecting piece		1	356 B-T6 356 C

- -- E N D -- -

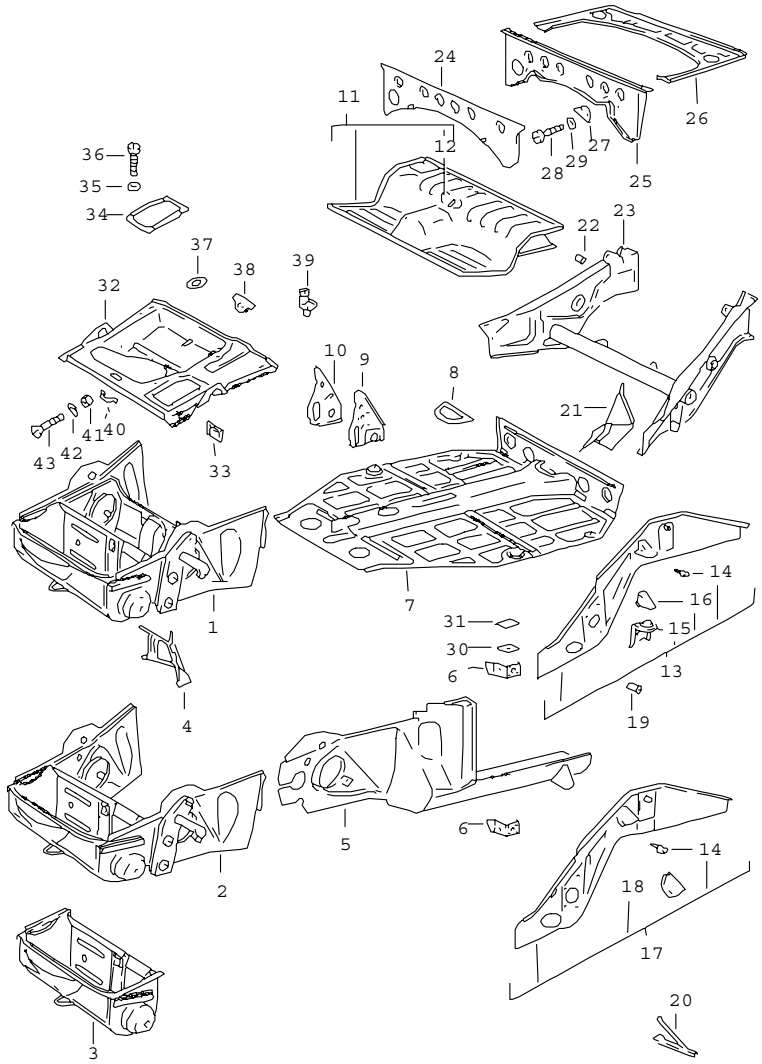

Pos	Part Number	Name	Remarks	Qty	Model
		frame			
(1)	E 644 501 005 05	frame front part with cross panel	/LL	1	356 B-T5
1	E 644 501 005 07	frame front part with cross panel	/LL	1	356 B-T6 356 C
(1)	E 644 501 005 06	frame front part with cross panel	/RL	1	356 B-T5
(1)	E 644 501 005 08	frame front part with cross panel	/RL	1	356 B-T6
-	E 644 501 005 09	frame front part with cross panel	/RL	1	356 C
-	E 644 501 041 09	cross panel	/RL	1	356 C
(2)	E 644 501 006 05	frame front part without cross panel	/LL	1	356 B-T5
2	E 644 501 006 07	frame front part without cross panel	/LL	1	356 B-T6 356 C
(2)	E 644 501 006 06	frame front part without cross panel	/RL	1	356 B-T5
(2)	E 644 501 006 08	cross panel without cross panel	/RL	1	356 B-T6 356 C
(3)	E 644 501 030 05	cross member front	/LL	1	356 B-T5
3	E 644 501 030 07	cross member front	/LL	1	356 B-T6 356 C
(3)	E 644 501 030 06	cross member front	/RL	1	356 B-T5
(3)	E 644 501 030 08	cross member front	/RL	1	356 B-T6 356 C
(4)	E 644 501 095 05	wing strut	/V/L	1	356 B-T5
4	644 501 095 06	wing strut	/V/L	1	356 B-T6 356 C

Pos	Part Number	Name	Remarks	Qty	Model
-	E 644 501 095 08	wing strut	/RL/V/L	1	356 B-T6 356 C
(4)	644 501 096 05	wing strut	/V/R	1	356 B-T5
(4)	644 501 096 06	wing strut	/V/R	1	356 B-T6 356 C
	GRV	prime coated			
(4)	E 644 501 095 11	wing strut	/V/L	1	CARRERA 2000
(4)	E 644 501 096 11	wing strut	/V/R	1	CARRERA 2000
(5)	E 644 501 003 07	side member with heater pipeline F 121 297 F 121 299 >> 121 303 F 121 305 >> 121 332 F 121 334 >> F 212 001 >> F 157 100 >>	/L /L	1 1	356 B-T5 356 B-T6 COUPE -REUTTER- COUPE -REUTTER- COUPE -REUTTER- COUPE -REUTTER- COUPE -KARMANN- CABRIO HARDTOP
5	E 644 501 003 06	side member with heater pipeline	/L	1	356 B-T6
(5)	E 644 501 004 07	side member with heater pipeline F 121 297 F 121 299 >> 121 303 F 121 305 >> 121 332 F 121 334 >> F 212 001 >> F 157 100 >>	/R /R	1 1	356 B-T5 356 B-T6 COUPE -REUTTER- COUPE -REUTTER- COUPE -REUTTER- COUPE -REUTTER- COUPE -KARMANN- CABRIO HARDTOP
(5)	E 644 501 004 06	side member with heater pipeline	/R	1	356 B-T6
(5)	E 644 501 003 16	side member with heater pipeline F 121 297 F 121 299 >> 121 303 F 121 305 >> 121 332 F 121 334 >> F 212 001 >> F 157 100 >>	/L	1	CARRERA 2000 GT COUPE -REUTTER- COUPE -REUTTER- COUPE -REUTTER- COUPE -REUTTER- COUPE -KARMANN- CABRIO HARDTOP
(5)	E 644 501 004 16	side member with heater pipeline F 121 297 F 121 299 >> 121 303 F 121 305 >> 121 332 F 121 334 >> F 212 001 >> F 157 100 >>	/R	1	CARRERA 2000 GT COUPE -REUTTER- COUPE -REUTTER- COUPE -REUTTER- COUPE -REUTTER- COUPE -KARMANN- CABRIO HARDTOP
-	E 644 501 029 05	heater pipeline		X	
6	E 644 501 231 00	hinge pillar lower and upper	/L	2	
(6)	E 644 501 232 00	hinge pillar lower and upper	/R	2	
(7)	E 644 501 002 05	floor with tunnel heel plate		1	356 B-T5
7	E 644 501 002 06	floor with tunnel heel plate		1	356 B-T6
(7)	E 644 501 002 16	floor with tunnel heel plate		1	CARRERA 2000 GT

Pos	Part Number	Name	Remarks	Qty	Model
(7)	E 644 501 002 07	floor with tunnel heel plate		1	356 C
-	E PCG 501 051 06	floorpan two pieces		1	
(8)	E 644 504 730 05	cover for tunnel without cover	/H	1	356 B-T5
8	E 644 504 730 06	cover for tunnel without cover	/H	1	356 B-T6 356 C
(8)	E 644 504 730 16	cover for tunnel without cover aluminium		1	CARRERA 2000 GT
(9)	644 501 047 05	base pedal floor board	/L	1	356 B-T5
9	E 644 501 047 06	pedal floor board base	/L	1	356 B-T6 356 C
10	E 644 501 048 05	base pedal floor board	/R	1	
11	E 644 501 072 06	seat well with transmission floor		1	
-	E 644 501 072 16	seat well with transmission floor		1	CARRERA 2000 GT
12	E 644 501 079 05	bearing back seat backrest centre		1	COUPE -REUTTER- CABRIO HARDTOP
13	E 644 501 015 05	side member complete	/L	1	
(13)	E 644 501 016 05	side member complete	/R	1	

Pos	Part Number	Name	Remarks	Qty	Model
(13)	E 644 501 015 06	side member complete F 121 297 F 121 299 >> 121 303 F 121 305 >> 121 332 F 121 334 >> F 212 001 >> F 157 100 >>	/L	1	COUPE -REUTTER- COUPE -REUTTER- COUPE -REUTTER- COUPE -REUTTER- COUPE -KARMANN- CABRIO HARDTOP
(13)	E 644 501 016 06	side member complete F 121 297 F 121 299 >> 121 303 F 121 305 >> 121 332 F 121 334 >> F 212 001 >> F 157 100 >>	/R	1	COUPE -REUTTER- COUPE -REUTTER- COUPE -REUTTER- COUPE -REUTTER- COUPE -KARMANN- CABRIO HARDTOP
(13)	E 644 501 015 16	side member complete		1	CARRERA 2000 GT
(13)	E 644 501 016 16	side member complete F 121 297 F 121 299 >> 121 303 F 121 305 >> 121 332 F 121 334 >> F 212 001 >> F 157 100 >>		1	CARRERA 2000 GT COUPE -REUTTER- COUPE -REUTTER- COUPE -REUTTER- COUPE -REUTTER- COUPE -KARMANN- CABRIO HARDTOP
14	E 644 501 155 01	bearing shock absorber		2	
15	E 644 501 171 05	stop		2	
16	E 644 501 173 00	support rubber stop		2	
17	E 644 501 015 07	side member complete	/L	1	356 C

Pos	Part Number	Name	Remarks	Qty	Model
(17)	E 644 501 016 07	side member complete	/R	1	356 C
18	E 644 501 169 06	rubber stop		2	356 C
19	E 644 501 865 00	threaded sleeve rear axle		8	
20	644 501 097 05	wing strut	/H	2	
	GRV	prime coated	/H		
21	E 644 501 117 05	gusset plate	/H/L	1	
(21)	E 644 501 118 05	gusset plate	/H/R	1	
22	E 644 501 163 05	threaded piece back seat backrest		1	
23	E 644 501 085 06	rear-axle cross-tube with side member		1	356 B-T5
23	E 644 501 085 07	rear-axle cross-tube with side member F 121 297 F 121 299 >> 121 303 F 121 305 >> 121 332 F 121 334 >> F 212 001 >> F 157 100 >>		1	356 B-T6 COUPE -REUTTER- COUPE -REUTTER- COUPE -REUTTER- COUPE -REUTTER- COUPE -KARMANN- CABRIO HARDTOP
(23)	E 644 501 085 16	rear-axle cross-tube with side member F 121 297 F 121 299 >> 121 303 F 121 305 >> 121 332 F 121 334 >> F 212 001 >> F 157 100 >>		1	CARRERA 2000 GT COUPE -REUTTER- COUPE -REUTTER- COUPE -REUTTER- COUPE -REUTTER- COUPE -KARMANN- CABRIO HARDTOP
24	E 644 501 750 05	cover plate cross member front		1	
25	E 644 501 760 05	cover plate cross member rear		1	
26	644 501 081 07	engine compartment cover		1	356 B
26	E 644 501 081 09	engine compartment cover		1	356 C
(26)	E 644 501 081 11	engine compartment cover		1	CARRERA 2000
-	E 644 501 089 10	cover plate spark plug	/L	1	CARRERA 1600 GT
-	E 644 501 819 00	cover plate spark plug	/L	1	CARRERA 2000
-	E 644 501 090 10	cover plate spark plug	/R	1	CARRERA 1600 GT
-	E 644 501 820 00	cover plate spark plug	/R	1	CARRERA 2000
-	E 900 075 011 01	hexagon-head bolt M 6 X 15		4	CARRERA 1600 GT
-	N 010 215 13	hexagon-head bolt M 6 X15		4	CARRERA 2000
-	N 012 007 2	lock ring A 6		4	CARRERA 1600 GT
-	900 027 014 01	lock ring B 6		4	CARRERA 2000
-	E 644 501 190 06	mount oil tank front complete		1	CARRERA 2000
-	E 644 501 195 00	mount oil tank rear complete		1	CARRERA 2000
-	E 644 501 181 00	bracket oil cooler		4	CARRERA 2000
-	E 644 501 183 00	threaded plate bracket oil cooler		4	CARRERA 2000
27	E 644 504 741 00	cover plate transmission carrier	/L	1	
(27)	E 644 504 742 00	cover plate transmission carrier	/R	1	

Pos	Part Number	Name	Remarks	Qty	Model
28	E 900 014 021 00	pan-head screw M 6 X 15		4	
29	900 028 008 01	spring washer B 6		4	
30	E 644 501 237 00	end plate hinge bracket left		1	
31	E 644 501 238 00	end plate hinge bracket right		1	
32	E 644 501 035 05	tank compartment floor	/LL	1	356 B-T5
32	E 644 501 035 07	tank compartment floor	/LL	1	356 B-T6 356 C
(32)	E 644 501 035 06	tank compartment floor	/RL	1	356 B-T5
(32)	E 644 501 035 08	tank compartment floor	/RL	1	356 B-T6
-	E 644 501 381 08	cable guide		1	
-	E 644 501 035 09	tank compartment floor		1	356 C
(32)	E 644 501 035 50	tank compartment floor fuel tank 80 L	/LL M	1	
(32)	E 644 501 036 50	tank compartment floor fuel tank 80 L	/RL M	1	
33	E 644 201 351 00	support restraining strap		2	
34	E 644 504 501 01	cover	/LL	1	356 B-T5
(34)	E 644 504 501 02	cover	/RL	1	356 B-T5
(34)	E 644 504 051 50	cover fuel tank 80 L	/LL	1	M/CARRERA
(34)	E 644 504 052 50	cover fuel tank 80 L	/RL	1	M
-	644 504 921 00	rubber seal cover		1	
-	E 644 504 503 50	cover oil filler screw		1	CARRERA 1600 GT
-	E 644 504 058 02	pan-head screw M 5 X 12		2	CARRERA 1600 GT
-	E 644 504 080 00	protective plate oil tank		1	CARRERA 1600 GT
(34)	E 644 504 501 03	cover	/LL	1	356 B-T6
(34)	E 644 504 051 10	cover aluminium		1	CARRERA
(34)	E 644 504 501 02	cover	/RL	1	356 B-T6
-	E 644 504 051 09	cover	/RL	1	356 C
-	E 644 504 503 50	cover oil filler screw	/RL	1	356 B-T6
-	644 504 503 09	cover oil filler screw	/RL	1	356 C
-	E 644 504 051 50	cover		1	CARRERA GT
-	E 900 014 058 02	pan-head screw M 5 X 12		2	CARRERA GT
-	E 644 504 080 00	protective plate oil tank		1	CARRERA GT
35	N 011 524 7	washer 6,4		4	
(36)	E 900 014 021 00	pan-head screw M 6 X 15		4	356 B-T5
36	900 014 028 02	pan-head screw M 6 X 20		4	356 B-T6 356 C
37	644 504 922 00	rubber seal		1	
-	E 644 504 922 09	rubber seal	/RL	1	356 C
38	E 644 201 251 06	plate		1	356 B-T6 356 C
(38)	E 644 201 251 08	plate	/RL	1	
39	644 501 223 00	funnel		1	356 C
40	E 644 025 171 00	support		1	
41	900 076 005 02	hexagon nut		2	
42	900 027 003 01	lock ring A 5		2	

Pos	Part Number	Name	Remarks	Qty	Model
43	E 900 019 004 02	rais. counters. h. tap. s. A M 5 X 15 chrome		2	
-	E 999 703 014 40	plug cover plate transmission not for seat belt		1	COUPE -REUTTER- CABRIO HARDTOP
-	E 999 501 101 00	plug heel plate not for seat belt		1	COUPE -REUTTER- CABRIO HARDTOP
		- -- E N D -- -			

Pos	Part Number	Name	Remarks	Qty	Model

Model	Year	MG	SG	Illustration	Restrictions	Update				
356	65	8	01	801-10		194	13:14	27.10.2005	PORSCHE	PET	PORSCHE

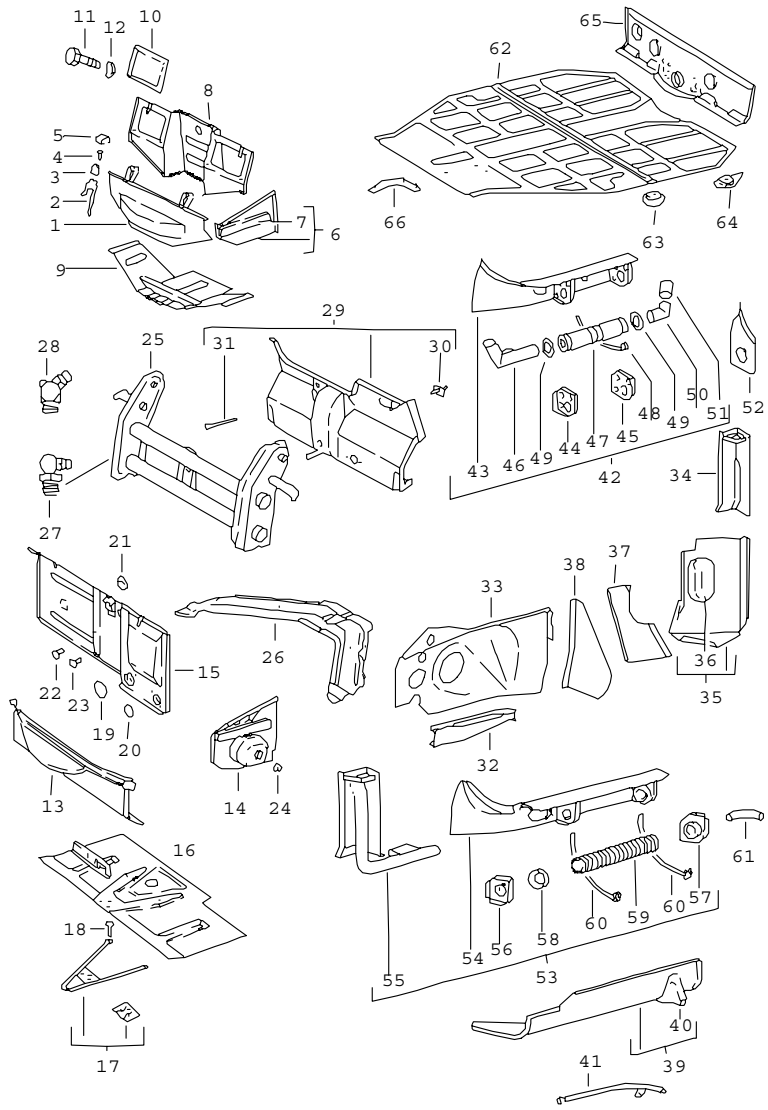

Pos	Part Number	Name	Remarks	Qty	Model
		frame single parts			
1	E 644 501 031 05	cross panel	/V	1	356 B-T5
2	E 644 501 093 00	bracket jacking point		2	356 B-T5
3	E 644 501 913 00	spring tension plate		2	
4	E 900 055 001 00	rivet 2,6 X 6		4	
5	E 644 501 915 00	rubber base		2	356 B-T5
6	E 644 501 033 05	side section	/L	1	356 B-T5
(6)	E 644 501 034 05	side section	/R	1	356 B-T5
7	E 644 501 039 05	bumper reinforcement		2	
8	E 644 501 032 00	wall	/LL	1	356 B-T5
(8)	E 644 501 032 04	wall	/RL	1	356 B-T5
9	E 644 501 037 05	floorpan		1	356 B-T5
10	E 644 504 521 10	cover		2	356 B-T5
(10)	E 644 504 522 10	cover	/RL/R	1	356 B-T5
11	E 900 075 011 02	hexagon-head bolt M 6 X 15		8	356 B-T5
12	N 012 007 2	lock ring A 6		8	356 B-T5
13	E 644 501 031 06	cross panel		1	356 B-T6
14	E 644 501 033 06	side section	/LL/L	1	356 B-T6
(14)	E 644 501 034 06	side section	/LL/R	1	356 B-T6
(14)	E 644 501 033 08	side section	/RL/L	1	356 B-T6
15	E 644 501 032 06	wall	/LL	1	356 B-T6 356 C
(15)	E 644 501 032 08	wall	/RL	1	356 B-T6 356 C
16	E 644 501 037 06	floorpan		1	356 B-T6 356 C
(16)	E 644 501 037 08	floorpan	/RL	1	356 B-T6
(17)	644 506 052 00	towing lug		1	356 B-T5

Pos	Part Number	Name	Remarks	Qty	Model
	GRV	prime coated			
17	644 506 050 06	towing lug		1	356 B-T6
	GRV	prime coated			356 C
18	900 055 015 00	rivet 6 X 15		5	
19	E 644 504 781 00	cover $ 50 MM		1	356 B-T6
20	E 644 504 782 00	cover $ 35 MM		1	356 B-T6
21	E 644 504 783 00	cover $ 25 MM		1	356 B-T6
22	E 644 025 676 00	plug		1	356 C
23	E 644 025 632 00	plug		2	356 C
24	E 644 572 961 00	plug		1	356 B-T6 356 C
25	644 341 010 01	cross member	/LL	1	
(25)	E 644 341 010 02	cross member	/RL	1	
(26)	E 644 501 441 00	cross member	/LL	1	356 B-T5
26	E 644 501 441 06	cross member	/LL	1	356 B-T6 356 C
	GRV				
(26)	E 644 501 442 06	cross member	/RL	1	356 B-T6 356 C
27	E 900 163 005 02	nipple C 10		1	356 B-T6 356 C
28	E 900 163 003 02	nipple B 10		3	356 B-T6 356 C
(29)	E 644 501 041 05	pedal floor board	/LL	1	356 B-T5
29	E 644 501 041 07	pedal floor board	/LL	1	356 B-T6 356 C
(29)	E 644 501 041 11	pedal floor board	/LL	1	CARRERA 2000
(29)	E 644 501 041 06	pedal floor board	/RL	1	356 B-T5
(29)	E 644 501 041 08	pedal floor board	/RL	1	356 B-T6 356 C
(29)	E 644 501 041 12	pedal floor board	/RL	1	CARRERA 2000

Pos	Part Number	Name	Remarks	Qty	Model
(30)	E 644 501 470 00	guide for handbrake		1	356 B-T5
30	E 644 501 470 01	guide for handbrake		1	356 B-T6 356 C
31	E 644 501 480 00	guide tube		1	
-	644 501 335 00	clip for handbrake		1	
32	E 644 501 417 00	reinforcement	/L	1	
	GRV	prime coated	/L		
(32)	E 644 501 418 00	reinforcement	/R	1	
	GRV	prime coated	/R		
33	-	plate alternative parts:	/L	X	
-	E 644 501 043 05	plate	/L	1	
-	E 644 501 043 00	plate	/L	1	
(33)	-	plate alternative parts:	/R	X	
-	E 644 501 044 05	plate	/R	1	
-	E 644 501 044 00	plate	/R	1	
34	644 501 021 05	wall	/L	1	
(34)	E 644 501 022 05	wall	/R	1	
(35)	E 644 501 023 05	wall	/L	1	356 B-T5
35	E 644 501 023 06	wall F 121 298 F 121 304 F 121 333 F >> 212 000 F >> 157 099	/L	1	356 B-T6 COUPE -REUTTER- COUPE -REUTTER- COUPE -REUTTER- COUPE -KARMANN- CABRIO HARDTOP

Pos	Part Number	Name	Remarks	Qty	Model
(35)	644 501 023 07	wall F 121 297 F 121 299 >> 121 303 F 121 305 >> 121 332 F 121 334 >> F 212 001 >> F 157 100 >>	/L	1	356 B-T6 356 C COUPE -REUTTER- COUPE -REUTTER- COUPE -REUTTER- COUPE -REUTTER- COUPE -KARMANN- CABRIO HARDTOP
(35)	E 644 501 023 16	wall	/L	1	CARRERA 2000 GT
(35)	E 644 501 024 05	wall	/R	1	356 B-T5
(35)	E 644 501 024 06	wall F 121 298 F 121 304 F 121 333 F >> 212 000 F >> 157 099	/R	1	356 B-T6 COUPE -REUTTER- COUPE -REUTTER- COUPE -REUTTER- COUPE -KARMANN- CABRIO HARDTOP
(35)	644 501 024 07	wall F 121 297 F 121 299 >> 121 303 F 121 305 >> 121 332 F 121 334 >> F 212 001 >> F 157 100 >>	/R	1	356 B-T6 356 C COUPE -REUTTER- COUPE -REUTTER- COUPE -REUTTER- COUPE -REUTTER- COUPE -KARMANN- CABRIO HARDTOP
(35)	E 644 501 024 16	wall	/R	1	CARRERA 2000 GT
36	E 644 645 551 00	retainer for loudspeaker		2	
37	644 501 211 00	reinforcement plate	/L	1	
	GRV	prime coated	/L		
(37)	644 501 212 00	reinforcement plate	/R	1	
	GRV	prime coated	/R		
38	644 501 221 00	end plate	/L	1	
(38)	644 501 222 00	end plate	/R	1	
(39)	644 501 017 06	bumper reinforcement F 121 298 F 121 304 F 121 333 F >> 212 000 F >> 157 099	/L	1	356 B-T5/T6 COUPE -REUTTER- COUPE -REUTTER- COUPE -REUTTER- COUPE -KARMANN- CABRIO HARDTOP
39	644 501 017 06	side member F 121 297 F 121 299 >> 121 303 F 121 305 >> 121 332 F 121 334 >> F 212 001 >> F 157 100 >>	/L	1	356 B-T6 356 C COUPE -REUTTER- COUPE -REUTTER- COUPE -REUTTER- COUPE -REUTTER- COUPE -KARMANN- CABRIO HARDTOP
(39)	644 501 018 06	bumper reinforcement F 121 298 F 121 304 F 121 333 F >> 212 000 F >> 157 099	/R	1	356 B-T5/T6 COUPE -REUTTER- COUPE -REUTTER- COUPE -REUTTER- COUPE -KARMANN- CABRIO HARDTOP

Pos	Part Number	Name	Remarks	Qty	Model
(39)	644 501 018 06	side member F 121 297 F 121 299 >> 121 303 F 121 305 >> 121 332 F 121 334 >> F 212 001 >> F 157 100 >>	/R	1	356 B-T6 356 C COUPE -REUTTER- COUPE -REUTTER- COUPE -REUTTER- COUPE -REUTTER- COUPE -KARMANN- CABRIO HARDTOP
40	644 501 150 00	jacking point		2	
(41)	E 644 501 679 07	tube F 121 297 F 121 299 >> 121 303 F 121 305 >> 121 332 F 121 334 >> F 212 001 >> F 157 100 >>	/L JULI -64	1	356 B-T6 356 C COUPE -REUTTER- COUPE -REUTTER- COUPE -REUTTER- COUPE -REUTTER- COUPE -KARMANN- CABRIO HARDTOP
41	E 644 501 679 08	tube	/L JULI 64-	1	356 C
(41)	E 644 501 680 07	tube F 121 297 F 121 299 >> 121 303 F 121 305 >> 121 332 F 121 334 >> F 212 001 >> F 157 100 >>	/R JULI -64	1	356 B-T6 356 C COUPE -REUTTER- COUPE -REUTTER- COUPE -REUTTER- COUPE -REUTTER- COUPE -KARMANN- CABRIO HARDTOP
(41)	644 501 680 08	tube	/R JULI 64-	1	356 C
42	E 644 501 009 05	side member complete	/L	1 1	356 B
(42)	E 644 501 010 05	side member complete	/R	1	356 B
43	E 644 501 011 05	side member	/L	1	356 B
(43)	E 644 501 012 05	side member	/R	1	356 B
44	644 501 261 05	reinforcement plate right front, left rear		2	
45	644 501 262 05	reinforcement plate left front, right rear		2	356 B
46	E 644 501 027 05	heating tube	/L	1	356 B
(46)	E 644 501 028 05	heating tube	/R	1	356 B
47	911 572 025 02	muffler it is necessary to rework		2	356 B
48	E 644 572 261 05	hose clamp		2	356 B
49	644 572 291 05	sealing washer		4	356 B
50	E 644 501 029 05	heater pipeline		2	356 B
51	E 644 501 291 05	hose piece		2	356 B
52	E 644 501 141 06	end plate frame	/H/L	1	
(52)	E 644 501 142 06	end plate frame	/R/L	1	
53	E 644 501 009 06	side member complete F 121 297 F 121 299 >> 121 303 F 121 305 >> 121 332 F 121 334 >> F 212 001 >> F 157 100 >>	/L	1	356 B-T6 356 C COUPE -REUTTER- COUPE -REUTTER- COUPE -REUTTER- COUPE -REUTTER- COUPE -KARMANN- CABRIO HARDTOP

Pos	Part Number	Name	Remarks	Qty	Model
(53)	E 644 501 010 06	side member complete F 121 297 F 121 299 >> 121 303 F 121 305 >> 121 332 F 121 334 >> F 212 001 >> F 157 100 >>	/R	1	356 B-T6 356 C COUPE -REUTTER- COUPE -REUTTER- COUPE -REUTTER- COUPE -REUTTER- COUPE -KARMANN- CABRIO HARDTOP
54	E 644 501 011 06	side member F 121 297 F 121 299 >> 121 303 F 121 305 >> 121 332 F 121 334 >> F 212 001 >> F 157 100 >>	/L	1	356 B-T6 356 C COUPE -REUTTER- COUPE -REUTTER- COUPE -REUTTER- COUPE -REUTTER- COUPE -KARMANN- CABRIO HARDTOP
(54)	E 644 501 011 16	side member	/L	1	CARRERA 2000 GT
(54)	E 644 501 012 06	side member F 121 297 F 121 299 >> 121 303 F 121 305 >> 121 332 F 121 334 >> F 212 001 >> F 157 100 >>	/R	1	356 B-T6 356 C COUPE -REUTTER- COUPE -REUTTER- COUPE -REUTTER- COUPE -REUTTER- COUPE -KARMANN- CABRIO HARDTOP
(54)	E 644 501 012 16	side member	/R	1	CARRERA 2000 GT
55	E 644 501 027 06	wall F 121 297 F 121 299 >> 121 303 F 121 305 >> 121 332 F 121 334 >> F 212 001 >> F 157 100 >>	/L	1	356 B-T6 356 C COUPE -REUTTER- COUPE -REUTTER- COUPE -REUTTER- COUPE -REUTTER- COUPE -KARMANN- CABRIO HARDTOP
(55)	E 644 501 028 06	wall F 121 297 F 121 299 >> 121 303 F 121 305 >> 121 332 F 121 334 >> F 212 001 >> F 157 100 >>	/R	1	356 B-T6 356 C COUPE -REUTTER- COUPE -REUTTER- COUPE -REUTTER- COUPE -REUTTER- COUPE -KARMANN- CABRIO HARDTOP
56	E 644 501 261 06	reinforcement plate F 121 297 F 121 299 >> 121 303 F 121 305 >> 121 332 F 121 334 >> F 212 001 >> F 157 100 >>	/V/L	1	356 B-T6 356 C COUPE -REUTTER- COUPE -REUTTER- COUPE -REUTTER- COUPE -REUTTER- COUPE -KARMANN- CABRIO HARDTOP

Pos	Part Number	Name	Remarks	Qty	Model
(56)	E 644 501 262 06	reinforcement plate F 121 297 F 121 299 >> 121 303 F 121 305 >> 121 332 F 121 334 >> F 212 001 >> F 157 100 >>	/V/R	1	356 B-T6 356 C COUPE -REUTTER- COUPE -REUTTER- COUPE -REUTTER- COUPE -REUTTER- COUPE -KARMANN- CABRIO HARDTOP
57	E 644 501 295 01	reinforcement plate F 121 297 F 121 299 >> 121 303 F 121 305 >> 121 332 F 121 334 >> F 212 001 >> F 157 100 >>	/H/L	1	356 B-T6 356 C COUPE -REUTTER- COUPE -REUTTER- COUPE -REUTTER- COUPE -REUTTER- COUPE -KARMANN- CABRIO HARDTOP
(57)	E 644 501 296 01	reinforcement plate F 121 297 F 121 299 >> 121 303 F 121 305 >> 121 332 F 121 334 >> F 212 001 >> F 157 100 >>	/H/R	1	356 B-T6 356 C COUPE -REUTTER- COUPE -REUTTER- COUPE -REUTTER- COUPE -REUTTER- COUPE -KARMANN- CABRIO HARDTOP
58	E 644 501 285 00	connecting piece F 121 297 F 121 299 >> 121 303 F 121 305 >> 121 332 F 121 334 >> F 212 001 >> F 157 100 >>		2	356 B-T6 356 C COUPE -REUTTER- COUPE -REUTTER- COUPE -REUTTER- COUPE -REUTTER- COUPE -KARMANN- CABRIO HARDTOP
59	A 911 572 025 02	muffler F 121 297 F 121 299 >> 121 303 F 121 305 >> 121 332 F 121 334 >> F 212 001 >> F 157 100 >>		2	356 B-T6 356 C COUPE -REUTTER- COUPE -REUTTER- COUPE -REUTTER- COUPE -REUTTER- COUPE -KARMANN- CABRIO HARDTOP
59	911 572 025 02	muffler it is necessary to rework F 121 297 F 121 299 >> 121 303 F 121 305 >> 121 332 F 121 334 >> F 212 001 >> F 157 100 >>		2	356 B-T6 356 C COUPE -REUTTER- COUPE -REUTTER- COUPE -REUTTER- COUPE -REUTTER- COUPE -KARMANN- CABRIO HARDTOP

Pos	Part Number	Name	Remarks	Qty	Model
60	E 644 572 261 05	hose clamp F 121 297 F 121 299 >> 121 303 F 121 305 >> 121 332 F 121 334 >> F 212 001 >> F 157 100 >>		4	356 B-T6 356 C COUPE -REUTTER- COUPE -REUTTER- COUPE -REUTTER- COUPE -REUTTER- COUPE -KARMANN- CABRIO HARDTOP
61	E 644 501 289 01	tube F 121 297 F 121 299 >> 121 303 F 121 305 >> 121 332 F 121 334 >> F 212 001 >> F 157 100 >>		2	356 B-T6 356 C COUPE -REUTTER- COUPE -REUTTER- COUPE -REUTTER- COUPE -REUTTER- COUPE -KARMANN- CABRIO HARDTOP
62	E PCG 501 051 06	floorpan		1	
62	E PCG 501 051 06	floorpan two pieces without heel plate		1	
(63)	E 644 501 570 00	support	/V	2	356 B-T5
63	E 644 501 570 06	support	/V	2	356 B-T6 356 C
(64)	E 644 501 540 05	support	/H	2	356 B-T5
64	E 644 501 539 06	support	/H/L	1	356 B-T6 356 C
(64)	E 644 501 540 06	support	/H/R	1	356 B-T6 356 C
(65)	E 644 501 730 05	heel plate		1	356 B
65	E 644 501 730 07	heel plate		1	356 C
(65)	E 644 501 730 16	heel plate		1	CARRERA 2000 GT
66	E 644 501 055 00	reinforcement	/LL	1	
(66)	E 644 501 056 00	reinforcement	/RL	1	
-	E 644 501 190 00	fastening part for oil tank	/V	1	CARRERA 1600 GT
-	E 644 501 195 00	fastening part for oil tank	/H	1	CARRERA 1600 GT
-	E 644 501 310 10	support for fuel pump installation parts for engine with engine heating old version		1	CARRERA 1600 GT
-	E 644 501 293 07	connecting piece for heating tube		2	
-	644 211 251 07	clip		2	
-	E 900 074 012 02	hexagon-head bolt M 6 X 20		2	
-	900 027 014 01	lock ring B 6		2	
-	900 076 010 02	hexagon nut M 6		2	

- -- E N D -- -

Model	Year	MG	SG	Illustration	Restrictions	Update	13:15	27.10.2005	PORSCHE PET PORSCHE
356	65	8	01	801-15		194			

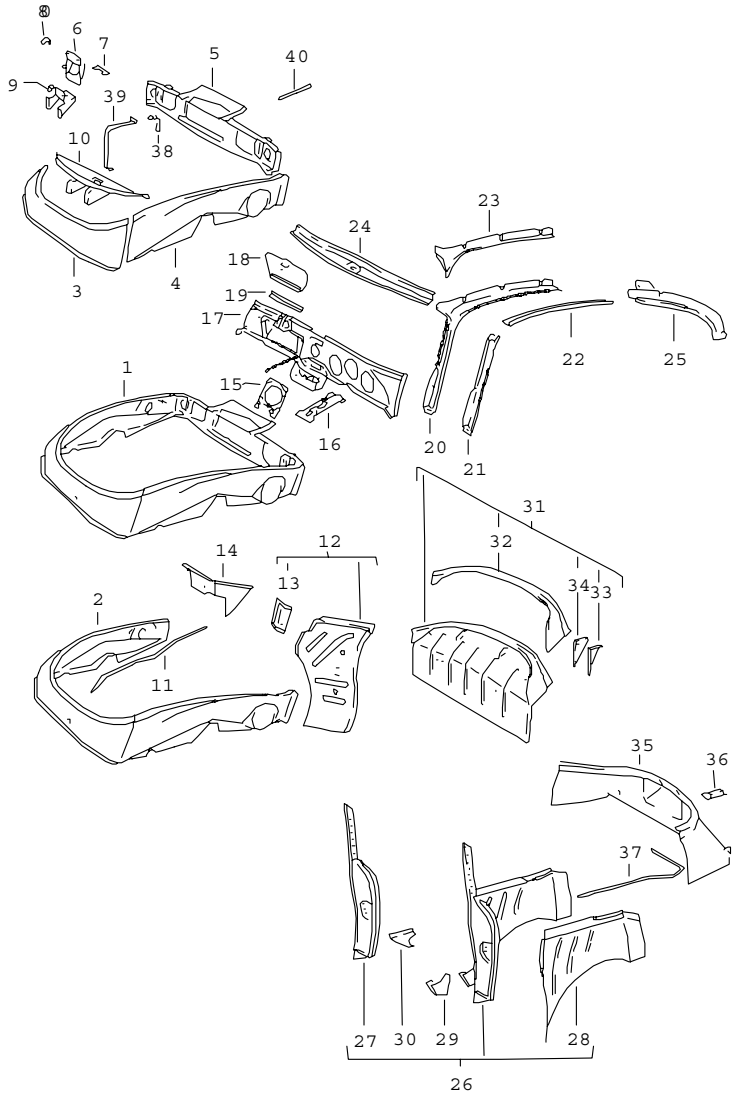

Pos	Part Number	Name	Remarks	Qty	Model
		interior panelling			
1	E 644 502 010 05	interior panelling front trunk		1	356 B-T5
1	E 644 502 010 06	interior panelling front trunk	/LL	1	356 B-T6 356 C
(1)	E 644 502 010 46	interior panelling front trunk	/LL	1	ROADSTER
(1)	E 644 502 010 08	interior panelling front trunk	/RL	1	356 B-T6
-	E 644 502 010 09	interior panelling front trunk	/RL	1	356 C
(1)	E 644 502 010 16	interior panelling front trunk		1	CARRERA 2000 GT
2	E 644 502 011 05	interior panelling front trunk		1	356 B-T5
2	E 644 502 011 06	interior panelling front trunk	/LL	1	356 B-T6 356 C
(2)	E 644 502 011 08	interior panelling front trunk	/RL	1	
(2)	E 644 502 011 16	interior panelling front trunk		1	CARRERA 2000 GT
3	E 644 502 101 05	interior panel front trunk		1	356 B-T5
3	E 644 502 101 06	interior panelling front trunk	/LL	1	356 B-T6 356 C
4	E 644 502 103 05	interior panelling front trunk	/L	1	356 B-T5
4	E 644 502 103 06	interior panelling front trunk	/LL/L	1	356 B-T6 356 C
(4)	E 644 502 104 05	interior panelling front trunk	/R	1	356 B-T5
(4)	E 644 502 104 06	interior panelling front trunk	/LL/R	1	356 B-T6 356 C
(4)	E 644 502 014 08	interior panelling front trunk	/RL/R	1	
(4)	E 644 502 104 16	interior panelling front trunk	/R	1	CARRERA 2000 GT
5	E 644 502 015 20	interior panel front trunk		1	356 B-T5

Pos	Part Number	Name	Remarks	Qty	Model
5	E 644 502 015 06	interior panelling front trunk	/LL	1	356 B-T6 356 C
(5)	E 644 502 015 46	interior panelling front trunk	/LL	1	ROADSTER
(5)	E 644 502 015 08	interior panelling front trunk	/RL	1	
6	E 644 502 150 00	lock carrier without lock		1	356 B-T5
7	E 644 502 155 00	threaded plate lock carrier		1	356 B-T5
8	E 644 502 156 00	securing clip cover		1	356 B-T5
9	E 644 502 150 07	lock carrier without lock		1	356 B-T6
10	E 644 502 050 00	lock carrier complete		1	356 C
11	644 502 181 00	guide tube lid-release cable		1	356 B
11	E 644 502 181 01	guide tube lid-release cable		1	356 C:COUPE -REUTTER-
(11)	E 644 502 181 21	guide tube lid-release cable		1	356 C:CABRIO HARDTOP
12	E 644 502 017 00	end plate door	/L	1	
12	644 502 018 00	end plate door	/R	1	
13	E 644 501 931 00	bracket door support		2	
-	E 644 502 017 16	end plate door	/L	1	CARRERA 2000 GT
-	E 644 502 018 16	end plate door	/R	1	CARRERA 2000 GT
14	E 644 502 245 00	gusset plate windscreen frame	/L	1	COUPE -REUTTER- CABRIO HARDTOP
(14)	E 644 502 246 00	gusset plate windscreen frame	/R	1	COUPE -REUTTER- CABRIO HARDTOP
15	E 644 502 170 00	support windscreen wiper motor		1	356 B-T5: COUPE -REUTTER- CABRIO HARDTOP
15	E 644 502 170 06	support windscreen wiper motor		1	356 B-T6 356 C
(15)	E 644 502 170 41	support windscreen wiper motor		1	356 B-T5: ROADSTER
(15)	E 644 502 170 46	support windscreen wiper motor		1	356 B-T6 356 C ROADSTER
16	E 644 502 921 00	reinforcement plate dashboard		1	356 B-T5: COUPE -REUTTER- CABRIO HARDTOP
16	E 644 502 091 00	reinforcement plate dashboard		1	356 B-T5: COUPE -REUTTER- CABRIO HARDTOP
16	E 644 502 091 06	reinforcement plate dashboard		1	356 B-T6 356 C
(16)	644 502 091 45	reinforcement plate dashboard		1	356 B-T5: ROADSTER
(16)	644 502 091 46	reinforcement plate dashboard		1	356 B-T6 356 C ROADSTER
17	E 644 502 021 05	dashboard with glove box cover	/LL	1	356 B-T5 COUPE -REUTTER- CABRIO HARDTOP
17	E 644 502 021 07	dashboard with glove box cover	/LL	1	356 B-T6
17	E 644 502 021 08	dashboard with glove box cover	/LL	1	356 C

Pos	Part Number	Name	Remarks	Qty	Model
(17)	644 502 021 45	dashboard	/LL	1	356 B-T5 ROADSTER
(17)	E 644 502 021 46	dashboard without glove box cover	/LL	1	356 B-T6 ROADSTER
(17)	E 644 502 022 05	dashboard with glove box cover	/RL	1	356 B-T5 COUPE -REUTTER- CABRIO HARDTOP
(17)	644 502 022 45	dashboard	/RL	1	356 B-T5 ROADSTER
(17)	E 644 502 021 16	dashboard without glove box cover	GT	1	CARRERA 2000 2000 GT
(17)	E 644 502 022 07	dashboard with glove box cover	/RL	1	356 B-T6
(17)	E 644 502 022 08	dashboard with glove box cover	/RL	1	356 C
18	644 552 511 00	glove box cover without hinge		1	356 B: COUPE -REUTTER- CABRIO HARDTOP
18	644 552 053 01	glove box cover with hinge	/LL/RL	1	356 C
19	E 644 552 521 00	hinge		1	356 B: COUPE -REUTTER- CABRIO HARDTOP
20	E 644 502 027 00	windscreen frame with roof frame	/L	1	356 B-T5 COUPE -REUTTER-
20	E 644 502 027 06	windscreen frame with roof frame	/L	1	356 B-T6 356 C COUPE -REUTTER-
(20)	E 644 502 028 00	windscreen frame with roof frame	/R	1	356 B-T5 COUPE -REUTTER-
(20)	E 644 502 028 06	windscreen frame with roof frame	/R	1	356 B-T6 356 C
21	E 644 502 025 06	windscreen frame without roof frame	/L	1	COUPE -REUTTER-
(21)	E 644 502 026 06	windscreen frame without roof frame	/R	1	COUPE -REUTTER-
22	644 502 241 00	roof frame	/L	1	356 B-T5 COUPE -REUTTER-
22	E 644 502 241 06	roof frame	/L	1	356 B-T6 COUPE -REUTTER-
(22)	644 502 242 00	roof frame	/R	1	356 B-T5 COUPE -REUTTER-
(22)	644 502 242 06	roof frame	-	1	356 B-T6 356 C COUPE -REUTTER-
23	E 644 502 251 00	lining roof frame	/L	1	356 B-T5 COUPE -REUTTER-
23	E 644 502 251 06	lining roof frame	/L	1	356 B-T6 356 C COUPE -REUTTER-
(23)	E 644 502 252 00	lining roof frame	/R	1	356 B-T5 COUPE -REUTTER-
(23)	E 644 502 252 06	lining roof frame	/R	1	356 B-T6 356 C COUPE -REUTTER-
24	E 644 502 220 00	windscreen frame part complete		1	356 B-T5 COUPE -REUTTER-
24	E 644 502 221 06	windscreen frame part complete		1	356 B-T6 356 C COUPE -REUTTER-

Pos	Part Number	Name	Remarks	Qty	Model
25	E 644 502 029 00	lining roof frame	/H/L	1	356 B COUPE -REUTTER-
25	E 644 502 029 01	lining roof frame	/H/L	1	356 C COUPE -REUTTER-
(25)	E 644 502 030 00	lining roof frame	/H/R	1	356 B COUPE -REUTTER-
(25)	E 644 502 030 01	lining roof frame	/H/R	1	356 C COUPE -REUTTER-
26	E 644 502 061 05	wheel housing panel complete	/L	1	356 B-T5 COUPE -REUTTER-
26	E 644 502 061 06	wheel housing panel complete	/L	1	356 B-T6 356 C COUPE -REUTTER-
(26)	E 644 502 062 05	wheel housing panel complete	/R	1	356 B-T5 COUPE -REUTTER-
(26)	E 644 502 062 06	wheel housing panel complete	/R	1	356 B-T6 356 C COUPE -REUTTER-
27	644 502 041 01	lock pillar	/L	1	COUPE -REUTTER-
(27)	644 502 042 01	lock pillar	/R	1	COUPE -REUTTER-
28	644 502 063 05	wheel housing panel	/L	1	356 B-T5 COUPE -REUTTER-
28	E 644 502 063 06	wheel housing panel	/L	1	356 B-T6 356 C COUPE -REUTTER-
(28)	644 502 064 05	wheel housing panel	/R	1	356 B-T5 COUPE -REUTTER-
(28)	E 644 502 064 06	wheel housing panel	/R	1	356 B-T6 356 C COUPE -REUTTER-
29	E 644 502 405 05	bracket lock pillar	/L	1	COUPE -REUTTER-
(29)	E 644 502 406 05	bracket lock pillar	/R	1	COUPE -REUTTER
30	E 644 502 407 00	angular plate lock pillar	/L	1	COUPE -REUTTER-
(30)	E 644 502 408 00	bracket lock pillar	/R	1	COUPE -REUTTER-
31	E 644 502 081 05	cross panel engine compartment		1	356 B-T5 COUPE -REUTTER-
31	E 644 502 081 06	cross panel engine compartment		1	356 B-T6 356 C
(31)	E 644 502 081 15	cross panel engine compartment		1	356 B-T5 CARRERA GT
(31)	E 644 502 081 07	cross panel engine compartment		1	356 B-T6 CARRERA 2000
32	E 644 502 811 00	connecting piece roof		1	356 B-T5 COUPE -REUTTER-
32	E 644 502 811 06	rear end lining		1	356 B-T6 356 C COUPE -REUTTER-
33	E 644 502 851 00	bracket hinge pillar	/L	2	356 B-T5 COUPE -REUTTER-
33	E 644 502 851 06	hinge bracket	/L	2	356 B-T6 356 C COUPE -REUTTER-
34	E 644 502 852 00	hinge bracket	/R	2	356 B-T5
34	E 644 502 852 06	hinge bracket	/R	2	356 B-T6 356 B-T6 COUPE -REUTTER-
35	E 644 502 083 05	rear wall engine compartment		1	356 B-T5 COUPE -REUTTER-

Pos	Part Number	Name	Remarks	Qty	Model
35	E 644 502 083 06	rear wall engine compartment		1	356 B-T6 356 C COUPE -REUTTER-
-	999 703 031 40	plug		2	356 B-T5: COUPE -REUTTER-
(35)	E 644 502 083 15	rear wall engine compartment		1	356 B-T5 CARRERA GT
(35)	E 644 502 083 07	rear wall engine compartment		1	356 B-T6 CARRERA 2000
-	E 692 107 361 00	mounting oil tube		2	356 B-T6 CARRERA 2000
36	E 644 503 821 05	bracket rear end centre part		2	
37	E 644 502 881 00	guide tube lid-release cable		1	
38	E 644 201 032 00	restraining strap fuel tank		2	
39	E 644 201 031 00	restraining strap fuel tank		2	
(39)	E 644 201 031 50	restraining strap fuel tank 80L	M	2	
-	900 075 033 02	hexagon-head bolt M 8 X 40 restraining strap mount		2	
-	900 025 007 02	washer 8,4		2	
40	E 644 502 183 00	guide tube lid-release cable tank filler neck		1	356 B-T6 356 C
		- -- E N D -- -			

Pos	Part Number	Name	Remarks	Qty	Model

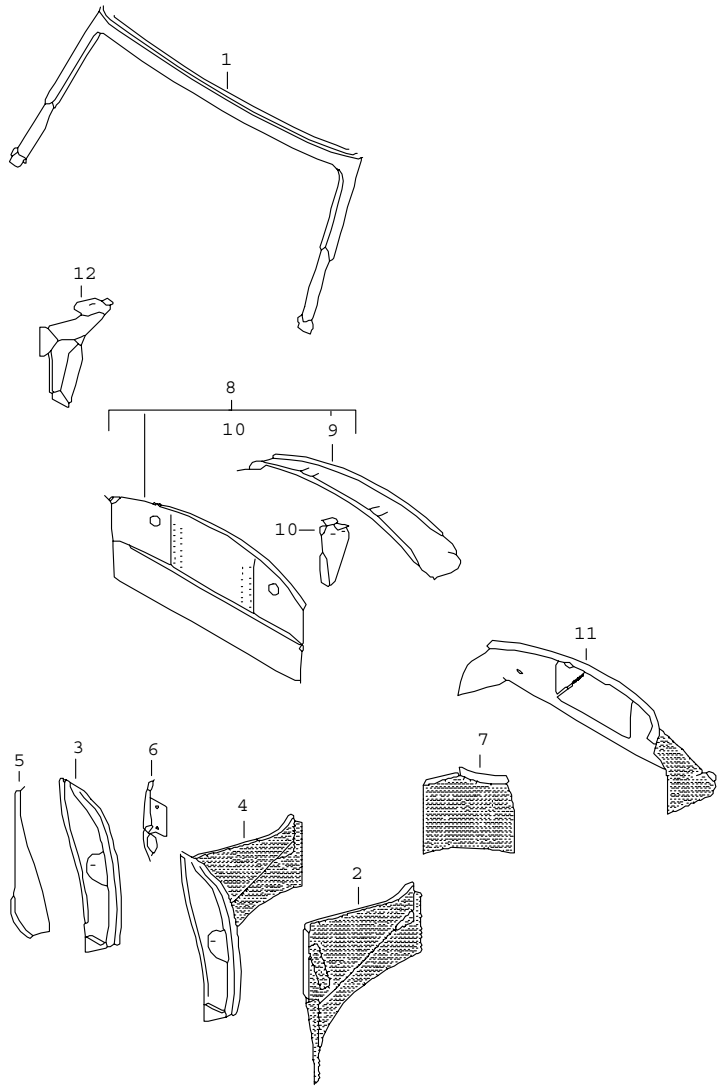

Pos	Part Number	Name	Remarks	Qty	Model
		interior panelling			CABRIO HARDTOP COUPE -KARMANN- ROADSTER
1	E 644 502 023 20	windscreen frame part		1	356 B-T5 COUPE -KARMANN-
(1)	E 644 502 023 36	windscreen frame part		1	356 B-T6 356 C COUPE -KARMANN-
2	E 644 502 063 25	wheel housing panel	/L	1	
(2)	E 644 502 064 25	wheel housing panel	/R	1	
(2)	E 644 502 601 25	wheel housing panel without reinforcement	/L	1	COUPE -KARMANN-
(2)	E 644 502 602 25	wheel housing panel without reinforcement	/R	1	COUPE -KARMANN-
-	644 502 611 30	reinforcement wheel housing panel	/L	1	COUPE -KARMANN
-	E 644 502 612 30	reinforcement wheel housing panel	/R	1	COUPE -KARMANN-
3	644 502 041 21	lock pillar	/L	1	
(3)	644 502 042 21	lock pillar	/R	1	
(3)	E 644 502 041 45	lock pillar	/L	1	ROADSTER
(3)	E 644 502 042 45	lock pillar	/R	1	ROADSTER
(3)	E 644 502 041 30	lock pillar	/L	1	356 B-T6 356 C COUPE -KARMANN-
(3)	E 644 502 042 30	lock pillar	/R	1	356 B-T6 356 C COUPE -KARMANN-
4	E 644 502 061 25	wheel housing panel with lock pillar	/L	1	
(4)	E 644 502 062 25	wheel housing panel with lock pillar	/R	1	

Pos	Part Number	Name	Remarks	Qty	Model
(4)	E 644 502 061 45	wheel housing panel with lock pillar	/L	1	ROADSTER
(4)	E 644 502 062 45	wheel housing panel with lock pillar	/R	1	ROADSTER
(4)	--- --- --- --	not available		*	COUPE -KARMANN-
5	E 644 502 841 25	cover plate	/L	1	
(5)	E 644 502 842 25	cover plate	/R	1	
(5)	E 644 502 841 45	cover plate	/L	1	ROADSTER
(5)	E 644 502 842 45	cover plate	/R	1	ROADSTER
6	E 644 502 069 20	bracket	/L	1	
(6)	E 644 502 070 20	bracket	/R	1	
7	E 644 502 603 25	wheel housing panel	/H/L	1	
(7)	E 644 502 604 25	wheel housing panel	/H/R	1	
8	E 644 502 081 25	cross panel to engine compartment		1	
(8)	644 502 081 45	cross panel to engine compartment		1	ROADSTER
(8)	E 644 502 081 30	cross panel to engine compartment		1	COUPE -KARMANN-
(8)	E 644 502 081 27	cross panel to engine compartment		1	CARRERA 2000
9	644 502 811 21	inner panel rear end upper		1	
(9)	E 644 502 811 40	inner panel rear end upper		1	ROADSTER
10	E 644 502 851 21	bracket		2	
(10)	644 502 851 41	bracket	/L	2	ROADSTER
(10)	644 502 852 41	bracket	/R	2	ROADSTER
11	E 644 502 083 26	rear wall to engine compartment		1	
(11)	644 502 083 45	rear wall to engine compartment		1	ROADSTER
(11)	E 644 502 083 27	rear wall to engine compartment		1	CARRERA 2000
-	E 692 107 361 00	mounting oil tube		5	CARRERA 2000
12	E 644 502 025 45	bracket windscreen frame	/L	1	ROADSTER
(12)	644 502 026 45	bracket windscreen frame	/R	1	ROADSTER

- -- E N D -- -

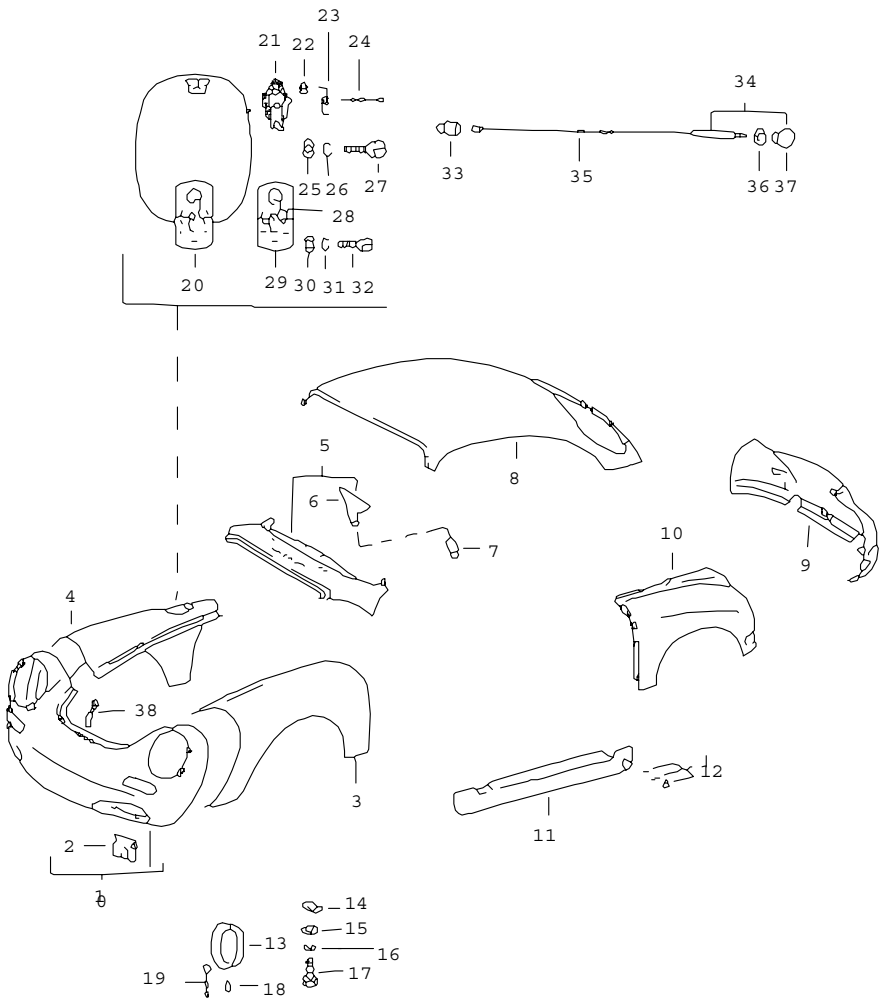

Pos	Part Number	Name	Remarks	Qty	Model
		exterior panelling			
1	644 503 011 05	lining		1	356 B-T5
	GRV	prime coated			
1	644 503 011 06	lining		1	356 B-T6/C
	GRV	prime coated			
1	E 644 503 011 11	lining		1	CARRERA 2000 GT/GS COUPE -REUTTER-
2	644 631 021 05	bracket		2	ROADSTER
	GRV	prime coated			COUPE -REUTER- CABRIO HARDTOP
2	E 644 631 021 11	bracket		2	CARRERA 2000 GT
3	644 503 033 05	front wing	/L	1	356 B-T5
	GRV	prime coated			
3	644 503 033 06	front wing	/L	1	356 B-T6/C
	GRV	prime coated			
4	644 503 034 05	front wing	/R	1	356 B-T5
	GRV	prime coated			
4	644 503 034 06	front wing	/LL/R	1	356 B-T6/C
	GRV	prime coated			
-	644 503 303 00	cup for tank filler neck		1	
(4)	E 644 503 034 08	front wing	/RL/R	1	356 B-T6/C
(4)	E 644 503 034 08	front wing		1	CARRERA 2000 GT
5	E 644 503 017 00	scuttle without heating nozzle		1	356 B-T5: COUPE -REUTTER- CABRIO HARDTOP

Pos	Part Number	Name	Remarks	Qty	Model
5	E 644 503 005 41	scuttle with heating nozzle delivered included rail 644.503.125.41	/LL	1	356 B-T5: ROADSTER
5	E 644 503 006 41	scuttle with heating nozzle delivered included rail 644.503.125.41	/RL	1	356 B-T5: ROADSTER
5	E 644 503 005 46	scuttle	/LL	1	356 B-T6: ROADSTER
5	E 644 503 017 01	scuttle without heating nozzle		1	356 B-T6: COUPE -REUTTER- CABRIO HARDTOP
5	E 644 503 017 21	scuttle without heating nozzle		1	356 C
6	644 572 045 06	heating nozzle	/L	1	356 B-T5: COUPE -REUTTER- CABRIO HARDTOP
6	644 572 046 06	heating nozzle	/R	1	356 B-T5: COUPE -REUTTER- CABRIO HARDTOP
6	E 644 572 045 45	heating nozzle	/L	1	356 B-T5: ROADSTER
6	E 644 572 046 45	heating nozzle	/R	1	356 B-T5: ROADSTER
6	644 572 045 06	heating nozzle	/L	1	356 B-T6/C
6	644 572 046 06	heating nozzle	/R	1	356 B-T6/C
7	E 644 572 925 00	hose for windscreen heating		1	356 B-T5: ROADSTER
7	911 201 515 00	hose for windscreen heating		1	356 B-T6: ROADSTER
8	644 503 051 00	outer roof panel		1	356 B-T5: COUPE -REUTTER-
8	E 644 503 051 06	outer roof panel		1	356 B-T6/C: COUPE -REUTTER-
8	E 644 503 051 56	outer roof panel for cars with sunroof	M	1	COUPE
9	E 644 503 081 05	rear end centre part		1	356 B-T5: COUPE
	GRV	prime coated			-REUTTER-
9	E 644 503 081 06	rear end centre part		1	356 B-T6: COUPE
	GRV	prime coated			-REUTTER-
9	E 644 503 081 07	rear end centre part	GT:	1	CARRERA 2000 COUPE -REUTTER-
10	644 503 061 05	wing	/H/L	1	356 B-T5: COUPE -REUTER-
10	644 503 061 06	wing	/H/L	1	356 B-T6/C: COUPE -REUTTER-
10	644 503 062 05	wing	/H/R	1	356 B-T5: COUPE -REUTTER-
10	644 503 062 06	wing		1	356 B-T6/C: COUPE -REUTTER-
11	E 644 503 041 00	entrance lining	/L	1	ROADSTER
	GRV	prime coated			COUPE -REUTTER- CABRIO HARDTOP
11	E 644 503 041 10	entrance lining	/L	1	CARRERA GT
(11)	644 503 042 00	entrance lining	/R	1	ROADSTER
	GRV	prime coated			COUPE -REUTTER- CABRIO HARDTOP

Pos	Part Number	Name	Remarks	Qty	Model
(11)	E 644 503 042 10	entrance lining	/R	1	CARRERA GT
12	644 504 079 00	spring cover with tensioning spring and screw		2	
13	644 631 151 00	headlamp casing		2	
	GRV	prime coated			
14	E 644 503 311 05	angle		2	
15	900 151 008 02	washer A 8		2	
16	900 027 015 02	lock ring A 8		2	
17	999 093 010 02	hexagon-head bolt M 8 X 20		2	
18	E 644 631 182 00	pipe		2	
19	911 025 612 00	drain tube		2	
20	644 504 031 00	cover tank filler neck		1	356 B-T6/C
21	901 504 034 20	bearing complete		1	356 B-T6/C
22	911 025 679 00	buffer		1	356 B-T6/C
23	644 504 309 00	spring		1	356 B-T6/C
24	E 900 021 019 00	cotter pin 3 X 30		1	356 B-T6/C
25	900 025 007 02	washer 8,4		1	356 B-T6/C
26	900 027 015 02	lock ring B 8		1	356 B-T6/C
27	900 067 053 02	pan-head screw M 8 X 12		1	356 B-T6/C
28	911 504 331 00	spring		1	356 B-T6/C
29	644 504 031 00	cover complete		1	356 B-T6/C
30	900 025 003 02	washer 5,3		3	356 B-T6/C
31	N 012 005 3	lock ring B 5		3	
32	900 067 051 02	pan-head screw M 5 X 10		3	356 B-T6/C
33	914 504 319 00	grommet		1	356 B-T6/C
34	644 504 037 00	cable complete		1	356 B-T6/C
35	644 504 317 00	cable		1	356 B-T6/C
36	E 000 025 325 00	washer		1	356 B-T6/C
37	644 552 811 00	knob		1	356 B-T6/C
	700	black			
38	644 503 181 06	water drain tube		1	356 B-T6/C
-	E 644 503 111 00	mount oil cooler	/L	1	CARRERA: 2000 GT COUPE -REUTTER-
-	E 644 503 112 00	transmission oil cooler		1	CARRERA: 2000 GT COUPE -REUTTER-
-	E 644 504 083 01	cover plate muffler		1	CABRIO HARDTOP
-	E 644 504 891 00	piping		1	CABRIO HARDTOP
-	E 900 075 097 12	hexagon-head bolt M 5 X 15 chrome		13	CABRIO HARDTOP
-	E 900 148 012 12	oval-head screw countersunk-head screw M 5 X 15 chrome		11	CABRIO HARDTOP
-	900 025 003 02	washer 3,5		13	CABRIO HARDTOP
-	N 012 005 3	lock ring B 5		13	CABRIO HARDTOP
-	N 011 005 14	hexagon nut M 5		13	CABRIO HARDTOP

Pos	Part Number	Name	Remarks	Qty	Model
-	E 644 504 080 00	protective plate oil tank complete		1	CABRIO HARDTOP CARRERA 2000 GT
-	E 900 075 011 01	hexagon-head bolt M 6 X 15		2	CABRIO HARDTOP CARRERA 2000GT
-	N 012 006 4	lock ring B 6		2	CABRIO HARDTOP CARRERA 2000 GT
		- -- E N D -- -			

Pos	Part Number	Name	Remarks	Qty	Model

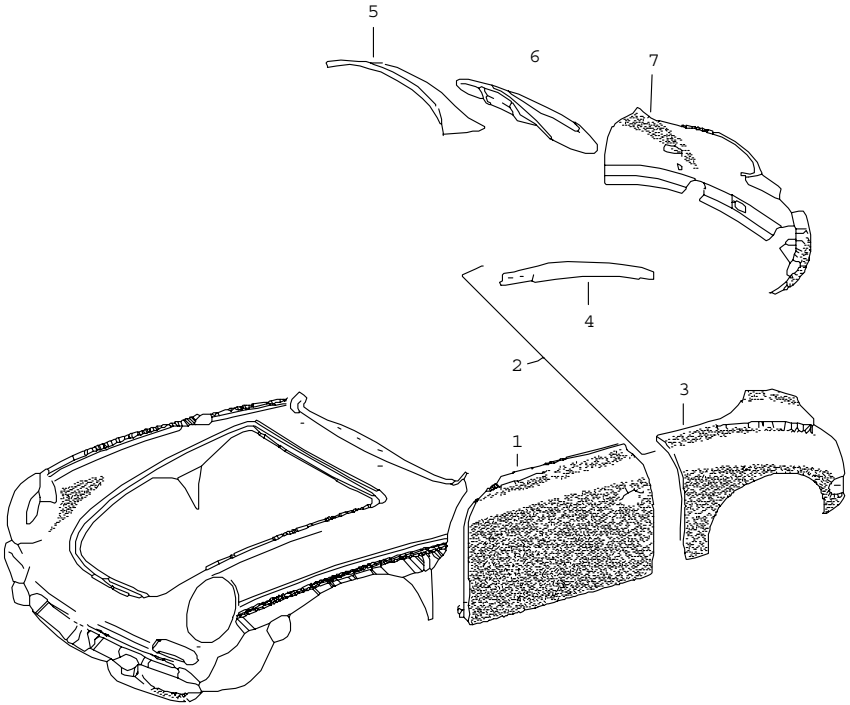

Pos	Part Number	Name	Remarks	Qty	Model
		exterior panelling wing rear			ROADSTER CABRIO HARDTOP CARRERA 2000 GT/GS
1	-	see group 8/04/00		*	
2	E 644 503 061 45	wing rear with door upper panel	/L	1	ROADSTER
(2)	E 644 503 062 45	wing rear with door upper panel	/R	1	ROADSTER
3	644 503 061 25	wing rear without door upper panel	/L	1	CABRIO HARDTOP
(3)	644 503 062 25	wing rear without door upper panel	/R	1	CABRIO HARDTOP
(3)	E 644 503 063 45	wing rear without door upper panel	/L	1	ROADSTER
(3)	E 644 503 064 45	wing rear without door upper panel	/R	1	ROADSTER
4	E 644 502 065 45	door upper panel	/L	1	ROADSTER
(4)	E 644 502 066 45	door upper panel	/R	1	ROADSTER
5	644 503 811 21	centre part upper		1	CABRIO HARDTOP
(5)	E 644 503 085 41	centre part upper		1	ROADSTER
6	-	see group 8/03/00 centre part		*	
7	644 503 081 25	centre part centre part	OP/	1	356 B-T5: CABRIO-HARDT ROADSTER
	GRV	prime coated			

Pos	Part Number	Name	Remarks	Qty	Model
7	644 503 081 26	rear end centre part		1	356 B-T6: CABRIO HARDTOP ROADSTER
-	E 644 503 081 27	rear end centre part		1	CARRERA 2000 GT/GS
-	E 644 503 813 30	tread rear window rear end		1	COUPE -KARMANN-
-	E 644 503 815 30	bracket rear end	/L	1	COUPE -KARMANN-
-	E 644 503 816 30	bracket rear end	/R	1	COUPE -KARMANN-
-	E 644 503 817 30	bracket extension rear end	/L	1	COUPE -KARMANN-
-	E 644 503 818 30	bracket extension rear end	/R	1	COUPE -KARMANN-
		- -- E N D -- -			

Pos	Part Number	Name	Remarks	Qty	Model

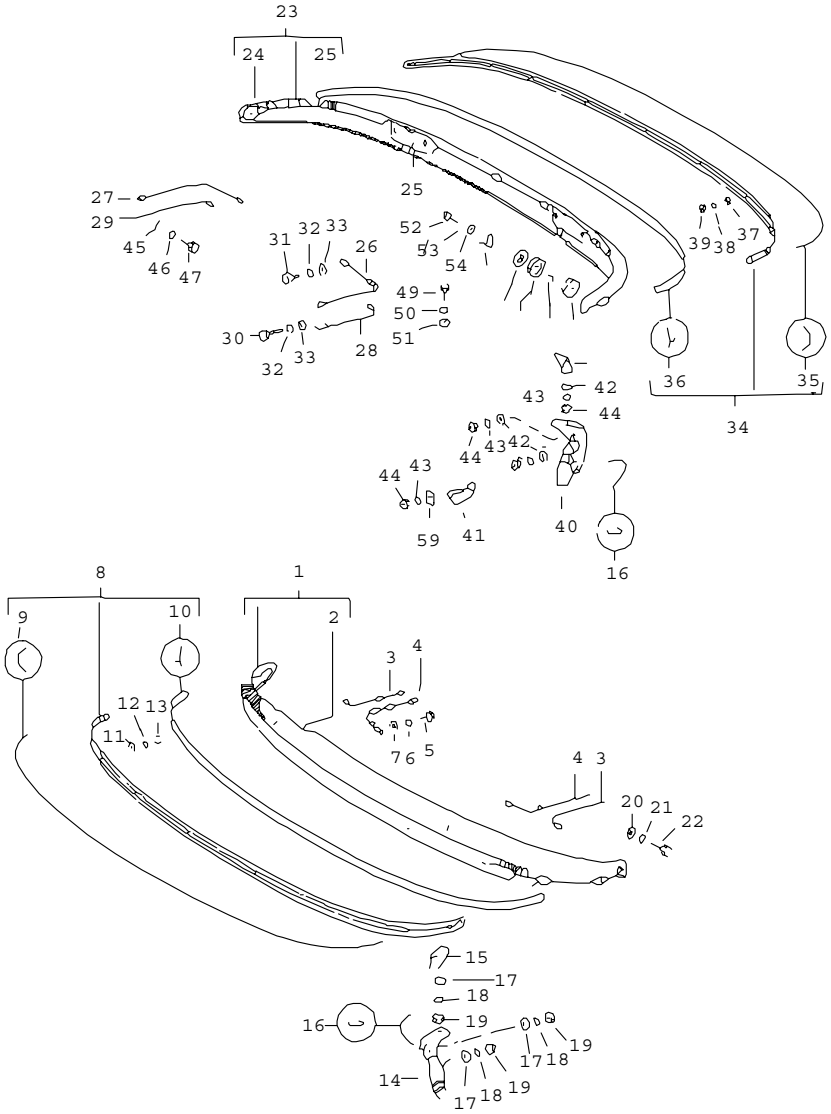

Pos	Part Number	Name	Remarks	Qty	Model
		bumper			
1	644 505 010 05	bumper	/V	1	
(1)	E 644 505 010 15	bumper	/V	1	CARRERA 1600 GT
(1)	E 644 505 010 12	bumper without bores for bumper horn	/V	1	CARRERA 2000 GT
2	644 505 017 05	bracket		2	
3	644 505 131 05	spring clip outer		2	
4	644 505 133 05	spring clip inner		2	
5	999 093 010 02	hexagon-head bolt M 8 X 20		4	
6	900 027 015 02	lock ring A 8		4	
7	900 151 008 02	washer 8,4		4	
8	644 505 041 07	moulding	/V	1	356 B
(8)	E 644 505 401 15	moulding	/V	1	CARRERA 1600 GT
(8)	644 505 041 07	moulding anodised	/V	1	356 C
9	644 505 411 05	insert plastic material		1	
10	E 644 505 431 05	desk pad plastic material		1	
11	900 025 003 02	washer 5,3		9	
12	900 027 003 02	lock ring A 5		9	
13	900 076 006 02	hexagon nut M 5		9	
14	644 505 301 15	bumper horn without attachment	/V/L	1	

Pos	Part Number	Name	Remarks	Qty	Model
(14)	644 505 302 15	bumper horn without attachment	/V/R	1	
15	644 505 325 05	attachment	/V	2	
16	999 911 182 40	piping 1700 MM	/V/H	X	
17	900 025 007 02	washer 8,4		6	
18	900 027 005 01	lock ring A 8		6	
19	900 076 025 02	hexagon nut M 8		6	
20	900 151 008 02	washer 8,4		4	
21	900 027 005 01	lock ring A 8		4	
22	900 075 099 02	hexagon-head bolt M 8 X 30		4	
23	644 505 020 05	bumper	/H	1	
(23)	E 644 505 020 15	bumper	/H	1	CARRERA 1600 GT
(23)	E 644 505 020 12	bumper without bores for bumper horn	/H	1	CARRERA 2000 GT
24	E 644 505 027 05	mounting plate		2	
25	644 505 017 05	bracket		2	
26	644 505 231 05	spring clip outer	/H/L	1	
27	644 505 232 05	spring clip outer	/H/R	1	
28	E 644 505 233 05	spring clip inner	/H/L	1	
29	E 644 505 234 05	spring clip inner	/H/R	1	
30	900 075 099 02	hexagon-head bolt M 8 X 30		2	
31	999 093 010 02	hexagon-head bolt M 8 X 20		2	
32	900 027 005 01	lock ring A 8		4	
33	900 151 008 02	washer A 8,4		4	
34	644 505 043 07	moulding	/H	1	356 B
(34)	644 505 403 15	moulding	/H	1	CARRERA 1600 GT
(34)	644 505 043 07	moulding anodised	/H	1	356 C
35	644 505 413 05	insert		1	
36	644 505 433 05	desk pad		1	
37	900 025 003 02	washer 5,3		11	
38	N 012 005 3	lock ring A 5		11	
39	900 076 006 02	hexagon nut M 5		11	
40	644 505 303 15	bumper horn without attachment	/H/L	1	
(40)	E 644 505 304 15	bumper horn without attachment	/H/R	1	
(40)	644 505 302 15	bumper horn	/H/L	1	CARRERA 2000
(40)	644 505 301 15	bumper horn	/H/R	1	CARRERA 2000
41	644 505 037 06	bumper horn tailpipe		2	
	GRV	prime coated			
42	900 025 007 02	washer 8,4		6	
43	900 027 005 02	lock ring A 8		8	
44	900 076 013 02	hexagon nut M 8		8	
45	900 151 008 02	washer 8,4		4	

Pos	Part Number	Name	Remarks	Qty	Model	Pos	Part Number	Name	Remarks	Qty	Model
46	900 027 005 02	lock ring A 8		4							
47	900 075 099 02	hexagon-head bolt M 8 X 30		4							
48	E 644 505 241 05	bracket		2							
49	900 075 029 02	hexagon-head bolt M 8 X 25		2							
50	900 027 005 02	lock ring A 8		2							
51	900 151 008 02	washer A 8,4		2							
52	900 074 040 02	hexagon-head bolt M 8 X 50		2							
53	900 027 005 02	lock ring A 8		2							
54	900 151 008 02	washer A 8,4		2							
55	644 505 247 05	base		2							
56	644 505 245 05	rubber buffer		4							
57	644 505 243 05	spacer tube		2							
58	644 505 325 05	attachment		2							
59	E 644 505 309 05	lock washer		2							
		- -- E N D -- -									

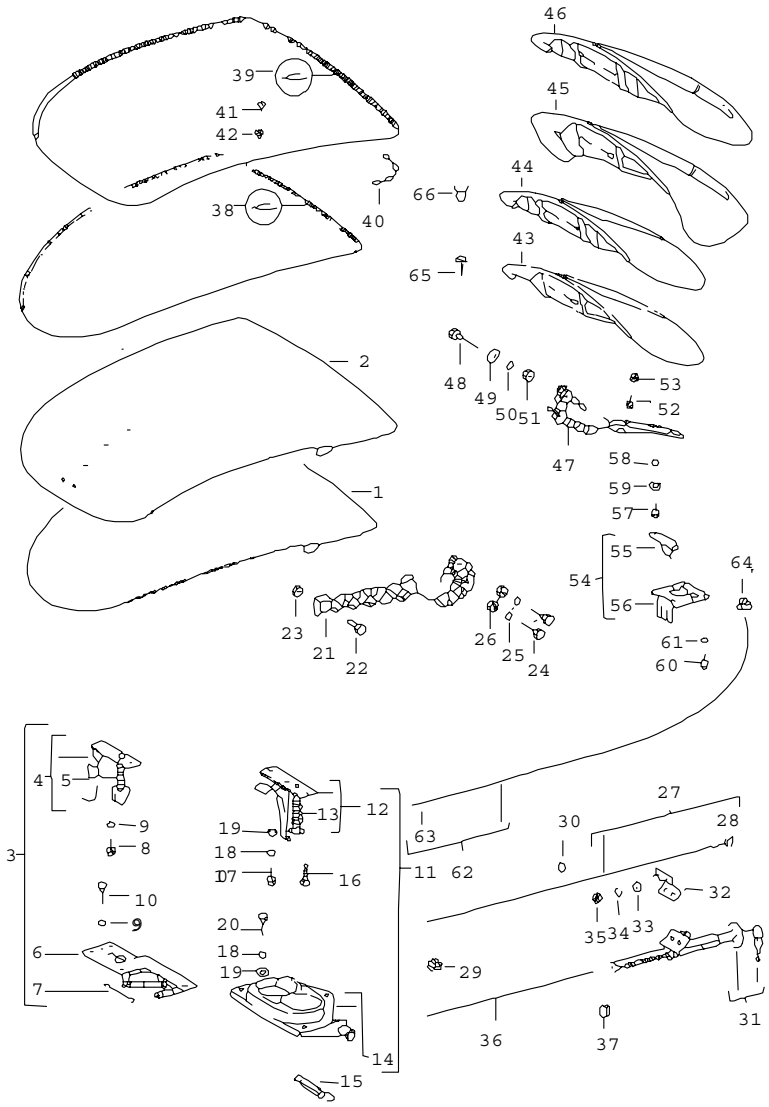

Pos	Part Number	Name	Remarks	Qty	Model
		cover front and rear with installation parts			
1	644 511 010 05	cover		1	356 B-T5
	GRV	prime coated without lock and hinge			
(1)	E 644 511 010 15	cover without lock and hinge		1	356 B-T5: CARRERA GT
2	644 511 010 07	cover		1	356 B-T6
	GRV	prime coated without lock and hinge			356 C
(2)	E 644 511 010 16	cover aluminium without lock and hinge		1	356 B-T6: CARRERA 2000 GT
(2)	E 644 511 010 18	cover aluminium without lock and hinge		1	356 C:M
3	E 644 511 051 00	lock complete		1	356 B
4	E 644 511 053 00	lock upper part bolt hook spring		1	356 B
5	E 644 511 512 00	tension spring		1	356 B
6	E 644 511 054 00	lock lower part without spring		1	356 B

Pos	Part Number	Name	Remarks	Qty	Model
7	644 511 511 00	tension spring lower part		1	356 B
8	N 010 215 13	hexagon-head bolt M 6 X 15		2	356 B
9	N 012 007 2	lock ring A 6		4	356 B
10	900 378 030 09	hexagon-head bolt M 6 X 20		2	356 B
11	E 644 511 051 01	lock complete		1	356 C
12	E 644 511 053 01	lock upper part complete		1	356 C
13	644 511 512 01	spring upper part		1	356 C
14	E 644 511 054 01	lock lower part complete		1	356 C
15	E 644 511 511 01	return spring lower part		1	356 C
16	N 010 215 13	hexagon-head bolt M 6 X 15		2	356 C
17	900 187 004 02	hexagon-head tapping screw B 4,8 X 19		1	356 C
18	N 012 007 2	lock ring A 6		6	356 C
19	900 151 003 02	washer A 6,4		6	356 C
20	900 075 010 02	hexagon-head bolt M 6 X 12		3	356 C
21	644 511 031 00	hinge	/L/R	2	
(21)	644 511 031 00	hinge	/L/R	2	CARRERA GT
22	999 093 010 02	hexagon-head bolt M 8 X 20		4	
23	900 076 013 02	hexagon nut M 8		4	
24	900 074 037 02	hexagon-head bolt M 8 X 35		4	
25	900 027 005 02	lock ring A 8		4	
26	900 076 013 02	hexagon nut M 8		4	
27	644 424 091 00	wire pull with knob black	/V	1	356 B: COUPE -REUTTER-
27	644 424 091 01	wire pull with knob	/V	1	356 C: COUPE -REUTTER-
28	644 552 811 00	knob please state the colour		1	
29	A 644 424 951 00	cable terminal wire pull		1	
-	111 129 921	nipple		1	
-	N 010 205 6	screw for nipple		1	
30	E 644 025 653 00	rubber sleeve		1	COUPE -REUTTER-
31	E 644 511 070 21	lock with 2 secondary keys		1	ROADSTER CABRIO HARDTOP
-	E 644 511 791 00	key state lock number		1	ROADSTER CABRIO HARDTOP
-	E 644 511 791 11	blank key		1	ROADSTER CABRIO HARDTOP
32	E 644 511 073 21	support		1	356 B-T5
32	E 644 511 073 26	support		1	356 B-T6
33	900 151 027 02	washer A 5,3		2	ROADSTER CABRIO HARDTOP
34	900 028 002 01	spring washer A 5		2	ROADSTER CABRIO HARDTOP
35	900 076 006 02	hexagon nut M 5		2	ROADSTER CABRIO HARDTOP

Pos	Part Number	Name	Remarks	Qty	Model
36	644 424 901 01	wire pull $ 1,2 X 1700		1	356 B
36	644 424 901 01	wire pull $ 1,2 X 2076		1	356 C
37	999 702 027 50	rubber sleeve		1	CABRIO HARDTOP
(37)	E 999 702 026 50	rubber sleeve 12 X 20 X 10		1	ROADSTER
38	644 511 901 06	gasket rubber 3750 MM		1	356 B-T5
39	644 511 901 06	tread rubber 3900 MM		1	356 B-T6
40	644 511 911 00	corner panel tread		2	
41	900 145 002 02	rais. counters. h. tap. s. cross-recess screw chrome		28	COUPE -REUTTER- CABRIO HARDTOP
41	900 145 002 02	rais. counters. h. tap. s. cross-recess screw chrome		20	ROADSTER
(41)	900 143 002 02	oval-head sheetmetal screw chrome		8	ROADSTER
42	E 999 591 005 12	washer		20	
43	E 644 512 001 00	cover without lock and hinge	/H	1	356 B-T5: COUPE -REUTTER-
(43)	E 644 512 001 10	cover without lock and hinge	/H	1	356 B-T5: CARRERA GT
44	644 512 001 26	cover without lock and hinge	/H	1	356 B-T5: ROADSTER CABRIO HARDTOP
45	644 512 001 06	cover without lock and hinge	/H	1	356 B-T6/C: COUPE -REUTTER-
(45)	E 644 512 001 16	cover aluminium without lock and hinge	/H	1	CARRERA 2000 GT
46	644 512 001 26	cover without lock and hinge not for - COUPE -	/H	1	356 B-T6 356 C
-	E 644 512 001 07	cover without lock and hinge	/H	1	CARRERA2000 COUPE -REUTTER-
-	644 512 001 26	cover without lock and hinge	/H	1	CARRERA 2000 CABRIO HARDTOP
47	644 512 031 00	hinge	/L	1	
(47)	644 512 031 00	hinge	/L	1	CARRERA GT
(47)	644 512 032 00	hinge	/R	1	
(47)	644 512 032 00	hinge	/R	1	CARRERA GT
48	900 074 037 02	hexagon-head bolt M 8 X 35		4	
49	900 025 007 02	washer 8,4		4	
50	900 027 015 02	lock ring B 8		4	
51	900 076 013 02	hexagon nut M 8		4	
52	N 010 210 13	hexagon-head bolt M 6 X 10		4	
53	900 076 006 02	hexagon nut M 6		4	

Pos	Part Number	Name	Remarks	Qty	Model
54	E 644 512 051 01	lock complete		1	356 B-T5
54	644 512 051 06	lock complete		1	356 B-T6 356 C
55	E 644 512 511 01	lock upper part		1	356 B-T5
55	E 644 512 511 06	lock upper part		1	356 B-T6 356C
56	E 644 512 052 01	lock lower part		1	
57	N 010 215 13	hexagon-head bolt M 6 X 15		X	
58	900 027 014 01	lock ring B 6		X	
-	E 644 512 171 00	threaded plate lock rear		1	356 B-T6 356 C
59	644 512 519 00	washer		2	COUPE -REUTTER-
60	N 010 215 13	hexagon-head bolt M 6 X 15		4	
61	N 012 007 2	lock ring B 6		4	
62	644 424 091 00	wire pull with knob black		1	
63	644 552 811 00	knob black		1	
64	A 644 424 951 00	cable terminal		1	
-	111 129 921	nipple		1	
-	N 010 205 6	screw for nipple		1	
65	999 703 086 40	plug		4	
66	E 644 025 673 00	threaded bush		4	
-	E 644 512 015 10	ventilation grille grille cover rear		2	356 B-T5: CARRERA
-	E 644 512 105 11	ventilation grille grille cover rear		2	CARRERA 2000
-	E 900 014 015 00	pan-head screw M 5 X 6		4	
-	E 900 026 001 01	washer 5,8		4	
-	N 012 005 3	lock ring B 5		4	
-	E 644 512 041 10	air duct cover rear	/L	1	
-	E 644 512 042 10	air duct cover rear	/R	1	
		belt for cover front			CARRERA GT COUPE:M
-	E 644 511 081 10	retaining strap for cover front		1	
-	E 900 018 008 02	oval-head screw M 3 X 10 chrome		12	
-	E 900 076 056 02	hexagon nut M 3		6	
-	900 028 006 01	spring washer B 3		6	
-	E 644 511 871 10	threaded plate		2	

- -- E N D -- -

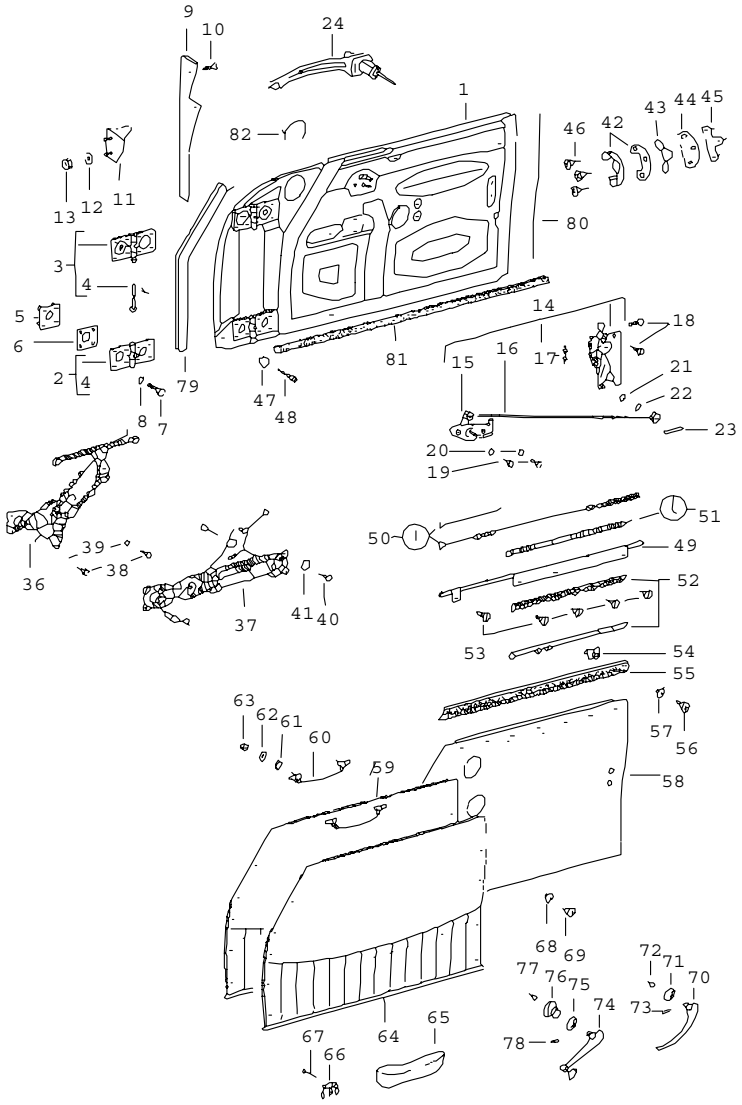

Pos	Part Number	Name	Remarks	Qty	Model
		door with accessories			
1	644 531 003 05	bare door shell	/L	1	356 B:
	GRV	prime coated with lock remote control hinge			COUPE -REUTTER-
-	PCG 531 003 05	exterior panelling		1	
	GRV	prime coated			
1	644 531 004 05	bare door shell	/R	1	356 B:
	GRV	prime coated with lock remote control hinge			COUPE -REUTTER-
-	PCG 531 004 05	exterior panelling		1	
	GRV	prime coated			
(1)	644 531 003 21	door in white with lock remote control hinge	/L	1	356 B: CABRIO HARDTOP
(1)	644 531 004 21	door in white with lock remote control hinge	/R	1	356 B: CABRIO HARDTOP
(1)	E 644 531 003 42	door in white with lock remote control hinge	/L	1	ROADSTER
(1)	E 644 531 004 42	door in white with lock remote control hinge	/R	1	ROADSTER
(1)	E 644 531 003 10	door in white aluminium with lock remote control hinge	/L	1	356 B: CARRERA GT

Pos	Part Number	Name	Remarks	Qty	Model
(1)	E 644 531 004 10	door in white aluminium with lock remote control hinge	/R	1	356 B: CARRERA GT
(1)	644 531 003 06	door in white with lock remote control hinge	/L	1	356 C: COUPE -REUTTER-
1	644 531 004 06	door in white with lock remote control hinge	/R	1	356 C: COUPE -REUTTER-
(1)	644 531 003 26	driver's door with lock remote control hinge	/L	1	356 C: CABRIO HARDTOP
	GRV	prime coated			
-	PCG 531 003 26	exterior panelling		1	
	GRV	prime coated			
(1)	644 531 004 26	driver's door with lock remote control hinge	/R	1	356 C: CABRIO HARDTOP
	GRV	prime coated			
-	PCG 531 004 26	exterior panelling		1	
	GRV	prime coated			
2	644 531 033 04	hinge lower with bolt	/L	1	356 B-T5
2	644 531 034 04	hinge lower with bolt	/R	1	356 B-T5
2	644 531 031 04	hinge lower with bolt	/L/R	2	356 B-T6 356 C

Pos	Part Number	Name	Remarks	Qty	Model
3	644 531 031 04	hinge upper with bolt	/L	1	356 B-T5
3	644 531 032 04	hinge upper with bolt	/R	1	356 B-T5
3	644 531 032 04	hinge upper with bolt	/L/R	2	356 B-T6 356 C
4	644 531 305 00	hinge bolt		4	
-	900 021 008 00	cotter pin 2 X 15 hinge bolt		4	
5	644 531 310 00	threaded plate hinge		4	
6	644 531 321 00	desk pad hinge		8	
7	900 075 029 02	hexagon-head bolt M 8 X 25		16	
8	900 027 005 02	lock ring A 8		8	
-	E 644 531 331 00	cover plate hinge	/L	1	
9	E 644 531 332 00	cover plate hinge	/R	1	
10	900 145 002 02	rais. counters. h. tap. s. B 2,9 X 9,5 cross-recess screw chrome		6	
11	644 531 035 00	door arrester rubber		2	
12	900 151 003 02	washer A 6,4		4	
13	900 076 010 02	hexagon nut M 6		4	
14	644 531 051 01	lock with remote control and wire pull	/L	1	

Pos	Part Number	Name	Remarks	Qty	Model
14	644 531 052 01	lock with remote control and wire pull	/R	1	
14	E 644 531 053 01	lock without remote control	/L	1	
14	E 644 531 054 01	lock without remote control	/R	1	
(15)	E 644 531 055 01	remote control	/L	1	
15	E 644 531 056 01	remote control	/R	1	
16	644 531 561 01	wire pull		1	
17	E 644 531 547 01	tension spring		2	
18	E 999 148 005 04	screw self-locking		8	
19	900 075 010 02	hexagon-head bolt M 6 X 12		4	
20	N 012 007 2	lock ring A 6		4	
21	E 644 531 581 01	spring washer		2	
22	E 644 531 582 01	washer		2	
23	900 021 008 00	cotter pin 2 X 15		2	
24	-	see illustrations 8/04/01		1	
(36)	644 542 041 01	power windows	/L	1	COUPE -REUTTER-
36	644 542 042 01	power windows	/R	1	COUPE -REUTTER-
(37)	E 644 542 041 21	power windows	/L	1	CABRIO HARDTOP
(37)	E 644 542 041 41	power windows	/L	1	ROADSTER
37	E 644 542 042 21	power windows	/R	1	CABRIO HARDTOP
(37)	E 644 542 042 41	power windows	/R	1	ROADSTER
38	N 010 210 13	hexagon-head bolt M 6 X 10		8	COUPE -REUTTER- CABRIO HARDTOP
(38)	900 075 010 02	hexagon-head bolt M 6 X 12		12	ROADSTER
39	N 012 007 2	lock ring A 6		8	COUPE -REUTTER- CABRIO HARDTOP
(39)	900 151 003 00	washer A 6,4		12	ROADSTER
40	644 542 481 00	hexagon-head bolt		4	CABRIO HARDTOP
41	900 151 003 02	washer A 6,4		4	CABRIO HARDTOP
(42)	644 531 701 01	door lock striker with intermediate plate	/L	1	
42	644 531 702 01	door lock striker with intermediate plate	/R	1	
43	644 531 723 00	shim		2	
44	644 531 713 00	reinforcement plate		2	
45	644 531 710 01	threaded plate		2	
46	900 147 001 02	countersunk-head screw A M 8 X 30		6	
47	644 531 741 00	rubber stop		2	
48	E 900 014 010 00	pan-head screw A M 6 X 40		2	
(49)	E 644 531 431 02	rail outer	/L	1	COUPE -REUTTER-
49	E 644 531 432 02	rail outer	/R	1	COUPE -REUTTER-
(49)	644 531 431 21	rail outer	/L	1	CABRIO HARDTOP
(49)	644 531 432 21	rail outer	/R	1	CABRIO HARDTOP
(49)	E 644 531 431 41	rail outer	/L	1	ROADSTER

Pos	Part Number	Name	Remarks	Qty	Model
(49)	E 644 531 432 41	rail outer	/R	1	ROADSTER
50	644 025 928 00	piping 2400 MM		X	COUPE -REUTTER- CABRIO HARDTOP
(50)	644 025 928 00	piping 702 MM		X	ROADSTER
51	644 531 931 41	profile strip rail 480 MM		2	COUPE -REUTTER- CABRIO HARDTOP
(51)	644 531 931 41	profile strip rail 725 MM		2	ROADSTER
52	644 531 935 00	seal 450 MM		4	COUPE -REUTTER- CABRIO HARDTOP
(52)	644 531 935 00	seal 670 MM		4	ROADSTER
53	900 139 001 02	counters. head tapp. screw A 2,9 X 9,5		10	COUPE -REUTTER- CABRIO HARDTOP
(53)	E 900 144 001 02	counters. head tapp. screw cross-recess screw B 2,9 X 9,5 chrome		22	ROADSTER
54	999 591 301 02	fixing clip		8	COUPE -REUTTER- CABRIO HARDTOP
54	999 591 301 02	fixing clip		16	ROADSTER
(55)	E 644 531 433 20	ornamental strip door	/L	1	356 B-T5
55	E 644 531 434 20	ornamental strip door	/R	1	356 B-T5
(55)	E 644 531 091 20	ornamental strip door leatherette please state the colour	/L	1	356 B-T6 356 C
55	E 644 531 092 20	ornamental strip door leatherette please state the colour	/R	1	356 B-T6 356 C
(55)	E 644 531 091 15	ornamental strip door leatherette black please state the colour	/L	1	CARRERA GT
(55)	E 644 531 092 15	ornamental strip door leatherette black please state the colour	/R	1	CARRERA GT
(55)	E 644 531 091 41	ornamental strip window guide inner with cover please state the colour	/L	1	ROADSTER
(55)	E 644 531 092 41	ornamental strip window guide inner with cover please state the colour	/R	1	ROADSTER
56	900 145 001 02	rais. counters. h. tap. s. cross-recess screw B 3,9 X 25		4	COUPE -REUTTER- CABRIO HARDTOP
(56)	E 900 145 011 02	rais. counters. h. tap. s. cross-recess screw B 4,2 X 25 chrome		4	ROADSTER
57	999 591 010 12	washer		4	COUPE -REUTTER CABRIO HARDTOP
(58)	E 644 555 033 01	door panel hard board	/L	1	356 B: COUPE -REUTTER- CABRIO HARDTOP
58	E 644 555 034 01	door panel hard board	/R	1	356 B: COUPE -REUTTER- CABRIO HARDTOP

Pos	Part Number	Name	Remarks	Qty	Model
(58)	644 555 033 42	door panel hard board	/L	1	ROADSTER
(58)	644 555 034 42	door panel hard board	/R	1	ROADSTER
(58)	E 644 555 033 07	door panel hard board	/L	1	356 C
58	E 644 555 034 07	door panel hard board complete with cover bag handle vehicle identification no. please state the colour	/R	1	356 C
(59)	644 555 031 01	door panel complete	/L	1	356 B: COUPE -REUTTER- CABRIO HARDTOP
59	E 644 555 032 01	door panel complete	/R	1	356 B: COUPE -REUTTER- CABRIO HARDTOP
(59)	E 644 555 003 42	door panel complete with flap bag	/LL/L	1	ROADSTER
(59)	644 555 003 45	door panel complete	/RL/L	1	ROADSTER
(59)	E 644 555 004 42	door panel complete with flap bag	/RL/R	1	ROADSTER
(59)	E 644 555 004 45	door panel complete	/LL/R	1	ROADSTER
-	E 644 555 045 41	flap bag with 1 key	/LL/L /RL/R	1	ROADSTER
-	E 644 555 451 41	lock bag with 1 key		1	ROADSTER
-	644 555 452 41	key		1	ROADSTER
(59)	E 644 555 031 15	door panel complete	/L	1	CARRERA 1600 GT
(59)	E 644 555 032 15	door panel complete	/R	1	CARRERA 1600 GT
-	644 555 091 15	piping leatherette black		2	CARRERA 1600 GT
-	E 644 555 355 10	screw		2	CARRERA 1600 GT
-	E 644 555 031 16	door panel complete without handle	/L	1	CARRERA 2000 GT
-	E 644 555 032 16	door panel complete without handle	/R	1	CARRERA 2000 GT
60	E 644 531 621 00	handle		2	356 B
61	E 999 591 101 12	washer aluminium		4	356 B
62	900 151 001 02	washer A 4,3		4	356 B
63	N 011 004 6	hexagon nut M 4		4	356 B
(64)	E 644 555 031 07	door panel complete with bag vehicle identification no. please state the colour	/L	1	356 C
64	E 644 555 032 07	door panel complete with bag vehicle identification no. please state the colour	/R	1	356 C
(65)	644 555 043 03	armrest complete not for red black anthracite please state the colour	/L	1	356 C

Pos	Part Number	Name	Remarks	Qty	Model
65	644 555 044 03	armrest complete not for red black anthracite please state the colour	/R	1	356 C
(65)	644 555 043 04	armrest complete for red black anthracite please state the colour	/L	1	356 C
(65)	644 555 044 04	armrest complete for red black anthracite please state the colour	/R	1	356 C
66	E 644 555 305 00	plate armrest		4	356 C
67	E 900 024 004 00	countersunk-head screw A M 6 X 15 for armrest 644.555.043.03/ 644.555.044.03		8	356 C
(67)	E 900 013 007 02	countersunk-head screw A M 6 X 15 for armrest 644.555.043.04 644.555.044.04		4	356 C
68	999 591 009 12	washer		28	356 B
(68)	999 591 009 12	washer		30	ROADSTER
68	E 999 591 102 12	protection washer		30	356 C
-	E 999 148 005 04	screw self-locking		8	356 C
69	900 145 006 02	rais. counters. h. tap. s. B 3,5 X 19		28	356 B
69	900 145 006 02	rais. counters. h. tap. s. B 3,5 X 19		14	ROADSTER

Pos	Part Number	Name	Remarks	Qty	Model
(69)	900 145 041 00	tapping screw B 3,5 X 16 chrome		14	ROADSTER
(69)	E 900 145 007 02	rais. counters. h. tap. s. B 3,5 X 22 chrome		2	ROADSTER
70	644 531 611 02	door handle interior handle		2	
71	E 644 552 891 01	rose		2	
72	644 531 691 00	rubber bush		2	
73	900 091 001 00	dowel pin 3 X 8		2	
74	644 542 470 01	window crank knob see group control button		2	
(74)	E 644 542 470 41	window crank with knob		2	
75	644 552 891 02	rose		2	
76	644 542 473 00	conical spring		2	
77	644 531 691 00	rubber bush		2	
78	900 091 001 00	dowel pin 3 X 8		2	
79	644 531 903 00	door seal front 650 MM		2	
80	644 531 901 00	door seal rear 1100 MM		1	
81	644 531 921 00	door seal lower 960 MM not for - ROADSTER -		2	
82	644 504 761 01	spring cover inner front		2	
-	644 504 761 01	spring cover	/V 62-	2	

- -- E N D -- -

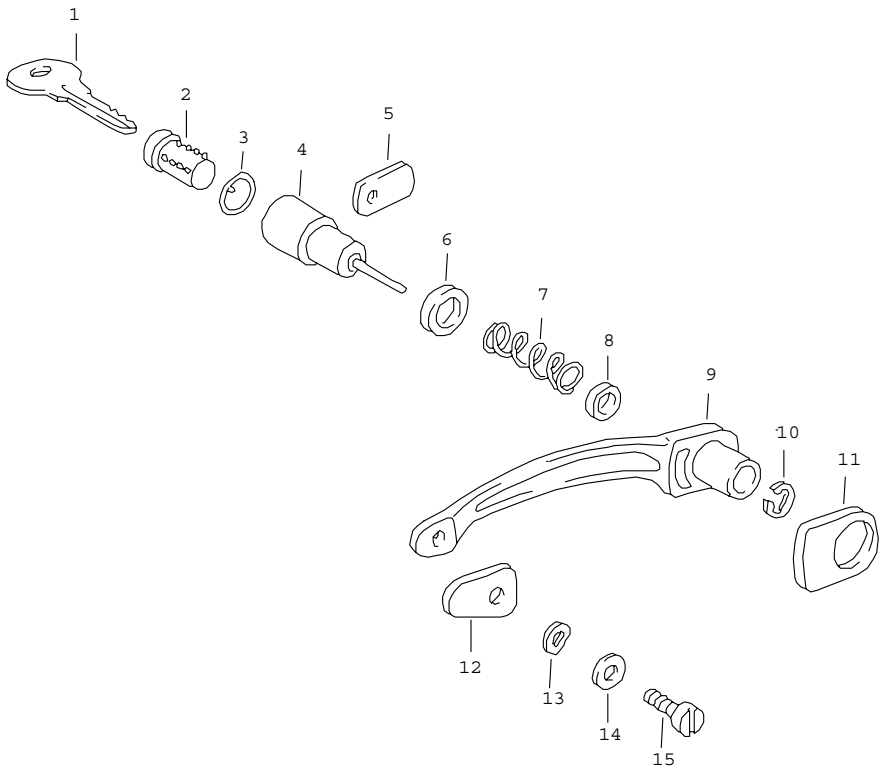

Pos	Part Number	Name	Remarks	Qty	Model
		outer door handle and single parts			
1	644 613 901 01	key state lock number		X	
(1)	644 613 901 09	blank key		X	
2	644 531 651 01	lock cylinder with keys	/L	1	
2	644 531 652 01	lock cylinder with keys	/R	1	
(2)	PCG 531 650 00	lock cylinder set for left and right with keys		1	
-	E PCG 531 650 10	set of locks comprising: ignition starter lock and lock cylinder		1	
3	911 531 981 00	sealing ring		2	
4	PCG 531 065 00	sleeve	/L	1	
4	PCG 531 066 00	sleeve	/R	1	
5	911 531 983 00	filler plate		2	
6	644 531 607 01	rubber boot		2	
7	644 531 605 01	compression spring		2	
8	644 531 606 01	rubber washer		2	
9	644 531 061 11	door handle		2	
10	900 116 006 02	lock washer		2	
11	644 531 631 01	rubber base		2	
12	644 531 632 00	rubber base		2	
13	N 012 225 2	spring washer B 5		2	
14	900 151 027 02	washer A 5,3		2	

Pos	Part Number	Name	Remarks	Qty	Model	Pos	Part Number	Name	Remarks	Qty	Model
15	E 900 015 005 02	oval-head screw AM 5 X 10		2							
		- -- E N D -- -									

Model	Year	MG	SG	Illustration	Restrictions	Update	13:17	27.10.2005	PORSCHE	PET	PORSCHE
356	65	8	04	804-05		194					

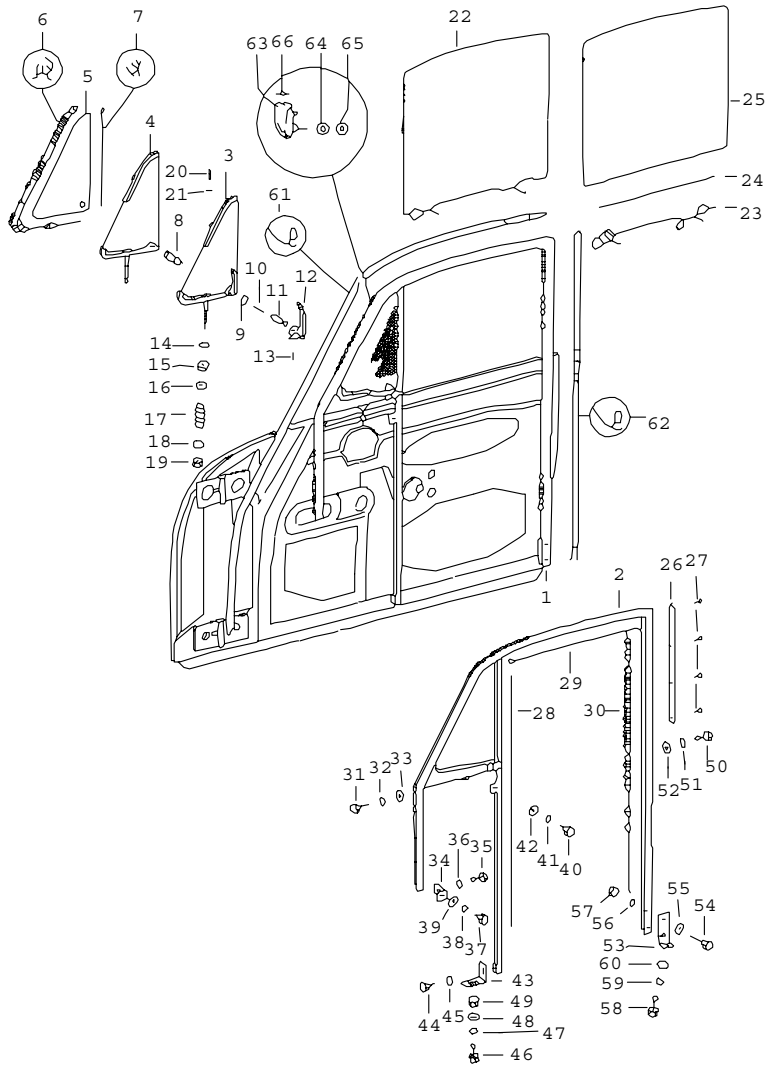

Pos	Part Number	Name	Remarks	Qty	Model
		door glass frame side window door glass			COUPE -REUTTER- CARRERA GT
(1)	E 644 542 005 01	door glass frame with side window complete	/L	1	356 B-T5
1	E 644 542 006 01	door glass frame with side window complete	/R	1	356 B-T5
(1)	E 644 542 005 06	door glass frame with side window complete	/L	1	356 B-T6 356 C
1	E 644 542 006 06	door glass frame with side window complete	/R	1	356 B-T6 356 C
-	E 644 542 005 16	door glass frame complete	/L	1	CARRERA 2000 GT
-	E 644 542 006 16	door glass frame complete	/R	1	CARRERA 2000 GT
-	E 644 531 453 16	retaining bracket door glass frame	/L	1	CARRERA 2000 GT
-	E 644 531 454 16	retaining bracket door glass frame	/R	1	CARRERA 2000 GT
(2)	E 644 542 061 01	door glass frame without window guide	/L	1	356 B-T5
2	644 542 062 01	door glass frame without window guide	/R	1	356 B-T5
(2)	E 644 542 061 06	door glass frame without window guide	/L	1	356 B-T6 356 C
(2)	E 644 542 062 06	door glass frame without window guide	/R	1	356 B-T6 356 C
(3)	E 644 542 051 03	side window complete with latch	/L	1	356 B-T5 COUPE -REUTTER

Pos	Part Number	Name	Remarks	Qty	Model
3	E 644 542 052 03	side window complete with latch	/R	1	356 B-T5: COUPE -REUTTER-
(3)	E 644 542 051 06	side window complete with latch	/L	1	356 B-T6: 356 C: COUPE -REUTTER-
(3)	E 644 542 052 06	side window complete with latch	/R	1	356B-T6: 356 C: COUPE -REUTTER-
(3)	E 644 542 051 10	side window complete with latch	/L	1	CARRERA GT
(3)	E 644 542 052 10	side window complete with latch	/R	1	CARRERA GT
(4)	E 644 542 057 03	side window without latch	/L	1	356 B-T5: COUPE -REUTTER-
4	E 644 542 058 03	side window without latch	/R	1	356 B-T5: COUPE -REUTTER-
(4)	E 644 542 057 06	side window without latch	/L	1	356 B-T6: 356 C: COUPE -REUTTER-
(4)	E 644 542 058 06	side window without latch	/R	1	356 B-T6: 356 C: COUPE -REUTTER-
5	644 542 105 01	side window glass	/L/R	2	COUPE -REUTTER
(5)	644 542 105 11	side window glass green	/L/R	2	COUPE -REUTTER-:M
(5)	E 644 542 105 10	side window glass plexiglas	/L/R	2	CARRERA 1600 GT
(5)	644 542 105 16	side window glass plexiglas	/L/R	2	CARRERA 2000 GT

Pos	Part Number	Name	Remarks	Qty	Model
(6)	644 542 931 03	tread rubber side window left	/V	1	
6	644 542 932 03	tread rubber side window right	/V	1	
7	E 644 542 933 02	tread rubber side window left right	/H	2	
8	644 542 558 00	bearing		2	
9	E 911 542 556 48	spring washer		10	
10	644 542 555 00	compression spring		2	
(11)	644 542 559 00	push button		2	356 B-T5
11	644 542 559 06	push button with lock		2	356 B-T6 356 C
(12)	E 644 542 551 20	latch	/L	1	
12	644 542 552 20	latch	/R	1	
13	900 090 001 00	dowel pin		2	
14	E 900 028 004 01	spring washer A 8		2	
15	644 542 563 00	thrust washer		2	
16	644 542 564 00	washer		2	
17	644 542 565 00	compression spring		2	
18	644 542 567 00	guide washer		2	
19	900 084 002 02	hexagon nut M 6 self-locking		2	
20	E 644 542 527 00	tubular rivet		2	
21	900 025 002 40	washer 4,3		2	
(22)	644 542 101 02	door glass with window lifter rail	/L	1	

Pos	Part Number	Name	Remarks	Qty	Model
22	644 542 101 02	door glass with window lifter rail	/R	1	
(23)	E 644 542 045 02	window lifter rail	/L	1	COUPE -REUTTER-
23	E 644 542 046 02	window lifter rail	/R	1	COUPE -REUTTER-
(23)	E 644 542 461 10	window lifter rail	/L/R	2	CARRERA GT
24	644 542 491 41	tread rubber 430 MM		2	
25	644 542 101 02	door glass	/L/R	2	COUPE -REUTTER-
(25)	644 542 101 11	door glass green	/L/R	2	COUPE -REUTTER-:M
(25)	E 644 542 101 10	door glass plexiglas	/L/R	2	CARRERA 1600 GT
-	E 644 542 101 16	door glass plexiglas	/L/R	2	CARRERA 2000 GT
-	E 644 542 431 10	leather strap door glass		2	CARRERA GT
-	E 900 018 009 02	oval-head screw countersunk-head screw M 3 X 15 chrome		6	CARRERA
-	E 900 076 056 02	hexagon nut M 3		6	CARRERA
-	E 900 027 010 00	lock ring B 3		6	CARRERA
(26)	E 644 531 411 00	rain channel door glass frame	/L	1	
26	E 644 531 412 00	rain channel door glass frame	/R	1	
27	900 019 001 12	oval-head screw countersunk-head screw A M 3 X 5 chrome		8	
28	644 542 901 26	window guide front 730 MM		2	356 B-T5
(28)	644 542 901 26	window guide front 730 MM		1	356 B-T6 356 C
29	644 542 902 00	window guide upper 460 MM		2	
30	644 542 902 00	window guide rear 720 MM		2	
31	N 010 215 13	hexagon-head bolt M 6 X 15		4	
32	N 012 007 2	lock ring A 6		4	
33	E 644 531 459 00	washer 15 X 6 X 0,8		4	
34	E 644 531 049 20	retaining bracket front lower		2	
35	900 075 010 02	hexagon-head bolt M 6 X 12		2	
36	N 012 007 2	lock ring A 6		2	
37	900 075 010 01	hexagon-head bolt M 6 X 12		2	
38	N 012 007 2	lock ring A 6		2	
39	900 151 003 01	washer A 6,4		2	
40	900 075 010 01	hexagon-head bolt M 6 X 12		2	
41	N 012 007 2	lock ring A 6		2	
42	900 151 003 01	washer A 6,4		2	
43	E 644 531 453 00	retaining bracket centre lower		2	
44	900 075 010 01	hexagon-head bolt M 6 X 12		2	
45	N 012 007 2	lock ring A 6		2	

Pos	Part Number	Name	Remarks	Qty	Model
46	E 900 075 011 01	hexagon-head bolt M 6 X 15		2	
47	N 012 007 2	lock ring A 6		2	
48	900 151 003 01	washer A 6,4		2	
49	900 076 010 02	hexagon nut M6		2	
50	900 189 002 02	half-round screw A M 6 X 15		2	
51	900 028 003 01	spring washer A 6		2	
52	900 151 003 01	washer A 6,4		2	
53	E 644 531 460 00	retaining bracket rear lower		2	
54	E 900 074 015 00	hexagon-head bolt M 6 X 30		4	
55	900 151 003 01	washer A 6,4		4	
56	N 012 007 2	lock ring A 6		4	
57	900 076 010 02	hexagon nut M 6		4	
58	900 075 010 01	hexagon-head bolt M 6 X 12		2	
59	N 012 007 2	lock ring A 6		2	
60	900 151 003 01	washer A 6,4		2	
61	E 644 531 911 01	door seal		1	
62	E 644 531 913 01	door seal		1	
1+62	E PCG 531 924 00	door seal single-barrel	/R	1	356 B-T5
1+62	644 531 924 00	door seal twin-barrel	/R	1	
1+62	PCG 531 923 00	door seal single-barrel	/L	1	356 B-T5
1+62	644 531 923 00	door seal twin-barrel	/L	1	
63	E 644 542 621 26	bearing upper part for door glass frame		2	356 B-T6 356 C
64	E 644 542 625 06	spacer		2	356 B-T6 356 C
65	E 999 084 101 02	hexagon nut self-locking M 4		2	356 B-T6 356 C
66	900 025 002 40	washer 4,3		2	356 B-T6 356 C

- -- E N D -- -

Model	Year	MG	SG	Illustration	Restrictions	Update	13:17	27.10.2005	PORSCHE	PET	PORSCHE
356	65	8	04	804-10		194					

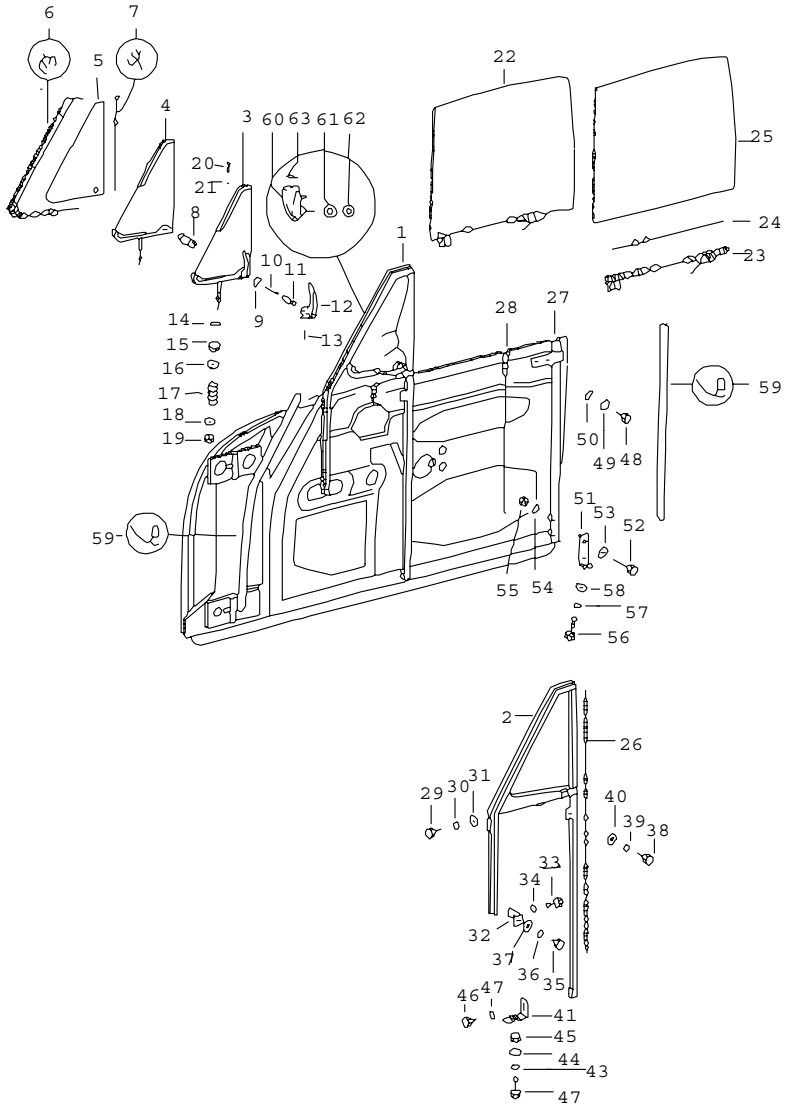

Pos	Part Number	Name	Remarks	Qty	Model
		door glass frame side window door glass window guide door glass			CABRIO HARDTOP COUPE -KARMANN- ROADSTER
(1)	E 644 542 005 20	door glass frame with side window complete	/L	1	356 B-T5
1	644 542 006 20	door glass frame with side window complete	/R	1	356 B-T5
1	E 644 542 005 26	door glass frame with side window complete	/L	1	356 B-T6 356 C
(1)	E 644 542 006 26	door glass frame with side window complete	/R	1	356 B-T6 356 C
-	E 644 531 041 41	guide	/V/L	1	ROADSTER
-	E 644 531 042 41	guide	/V/R	1	ROADSTER
-	E 644 531 450 41	fastening screw guide front and rear		4	ROADSTER
(2)	E 644 542 061 20	door glass frame without window guide	/L	1	356 B-T5
2	E 644 542 062 20	door glass frame without window guide	/R	1	356 B-T5
2	E 644 542 061 26	door glass frame without window guide	/L	1	356 B-T6 356 C
(2)	E 644 542 062 26	door glass frame without window guide	/R	1	356 B-T6 356 C
(3)	E 644 542 051 30	side window complete with latch	/L	1	356 B-T5

Pos	Part Number	Name	Remarks	Qty	Model
3	644 542 052 30	side window complete with latch	/R	1	356 B-T5
3	E 644 542 051 26	side window complete with latch	/L	1	356 B-T6 356 C
(3)	E 644 542 052 26	side window complete with latch	/R	1	356 B-T6 356 C
(4)	E 644 542 057 30	side window without latch	/L	1	356 B-T5
4	E 644 542 058 30	side window without latch	/R	1	356 B-T5
4	E 644 542 057 26	side window without latch	/L	1	356 B-T6 356 C
(4)	E 644 542 058 26	side window without latch	/R	1	356 B-T6 356 C
5	E 644 542 105 30	side window glass	/L/R	2	
(6)	644 542 931 26	tread rubber side window left	/V	1	
6	644 542 932 26	tread rubber side window right	/H	1	
7	E 644 542 933 02	tread rubber 250 MM side window left right		2	
8	644 542 558 00	bearing		2	
9	E 911 542 556 48	spring washer		10	
10	644 542 555 00	compression spring		2	
(11)	644 542 559 00	push button		2	356 B-T5
11	644 542 559 06	push button with lock		2	356 B-T6 356 C
(12)	E 644 542 551 20	latch	/L	1	
12	644 542 552 20	latch	/R	1	
13	900 090 001 00	dowel pin		2	
14	E 900 028 004 01	spring washer A 8		2	
15	644 542 563 00	thrust washer		2	
16	644 542 564 00	washer		2	
17	644 542 565 00	compression spring		2	
18	644 542 567 00	guide washer		2	
19	900 084 002 02	hexagon nut M 6 self-locking		2	
20	E 644 542 527 00	tubular rivet		2	
21	900 025 002 40	washer 4,3		2	
(22)	644 542 101 21	door glass with window lifter rail	/L	1	
22	644 542 101 21	door glass with window lifter rail	/R	1	
(22)	644 542 101 41	door glass with window lifter rail	/L	1	ROADSTER
(22)	644 542 101 41	door glass with window lifter rail	/R	1	ROADSTER
(23)	E 644 542 045 21	window lifter rail	/L	1	
23	E 644 542 046 21	window lifter rail	/R	1	
(23)	E 644 542 045 41	window lifter rail	/L	1	ROADSTER
(23)	E 644 542 046 41	window lifter rail	/R	1	ROADSTER
24	644 542 491 41	tread rubber 430 MM		2	

Pos	Part Number	Name	Remarks	Qty	Model
(24)	644 542 491 41	tread rubber 900 MM		2	ROADSTER
25	644 542 101 21	door glass	/L/R	2	
(25)	644 542 101 41	door glass	/L/R	2	ROADSTER
26	644 542 901 26	window guide front 730 MM		2	356 B-T5
26	644 542 901 26	window guide front 730 MM		2	356 B-T6 356 C
(27)	E 644 531 045 21	window guide rear	/L	1	
27	E 644 531 046 21	window guide rear	/R	1	
(27)	644 531 043 41	door glass frame rear	/L	1	ROADSTER
(27)	E 644 531 044 41	guide rail rear	/R	1	ROADSTER
28	644 542 902 00	window guide rear 450 MM		2	
29	900 075 010 01	hexagon-head bolt M 6 X 12		4	
30	N 012 007 2	lock ring A 6		4	
31	E 644 531 459 00	washer 15 X 6 X 0,8		4	
32	E 644 531 049 20	retaining bracket front lower		2	
33	900 075 010 02	hexagon-head bolt M 6 X 12		2	
34	N 012 007 2	lock ring A 6		2	
35	900 075 010 01	hexagon-head bolt M 6 X 12		2	
36	N 012 007 2	lock ring A 6		2	
37	900 151 003 01	washer A 6,4		2	
38	900 075 010 01	hexagon-head bolt M 6 X 12		2	
39	N 012 007 2	lock ring A 6		2	
40	900 151 003 01	washer A 6,4		2	
41	E 644 531 453 00	retaining bracket centre lower		2	
42	E 900 075 011 01	hexagon-head bolt M 6 X 15		2	
43	N 012 007 2	lock ring A 6		2	
44	900 151 003 01	washer A 6,4		2	
45	900 076 010 02	hexagon nut M 6		2	
46	900 075 010 01	hexagon-head bolt M 6 X 12		2	
47	N 012 007 2	lock ring A 6		2	
48	900 075 009 01	hexagon-head bolt M 6 X 10		4	
49	900 151 003 01	washer A 6,4		4	
50	900 028 003 01	lock ring A 6		4	
51	E 644 531 460 00	retaining bracket rear lower		2	
52	900 074 015 02	hexagon-head bolt M 6 X 30		4	
53	900 151 003 01	washer A 6,4		4	
54	N 012 007 2	lock ring A 6		4	
55	900 076 010 02	hexagon nut M 6		4	

Pos	Part Number	Name	Remarks	Qty	Model
56	900 075 010 01	hexagon-head bolt M 6 X 12		2	
57	N 012 007 2	lock ring A 6		2	
58	900 151 003 01	washer A 6,4		2	
(59)	A 644 531 911 22	gasket		X	
59	644 531 911 22	tread 600 MM		4	
60	E 644 542 621 26	bearing upper part for door glass frame		2	356 B-T6 356 C
61	E 644 542 625 06	spacer		2	356 B-T6 356 C
62	E 999 084 101 02	hexagon nut self-locking M 4		2	356 B-T6 356 C
63	900 025 002 40	washer 4,3		2	356 B-T6 356 C
		- -- E N D -- -			

Pos	Part Number	Name	Remarks	Qty	Model

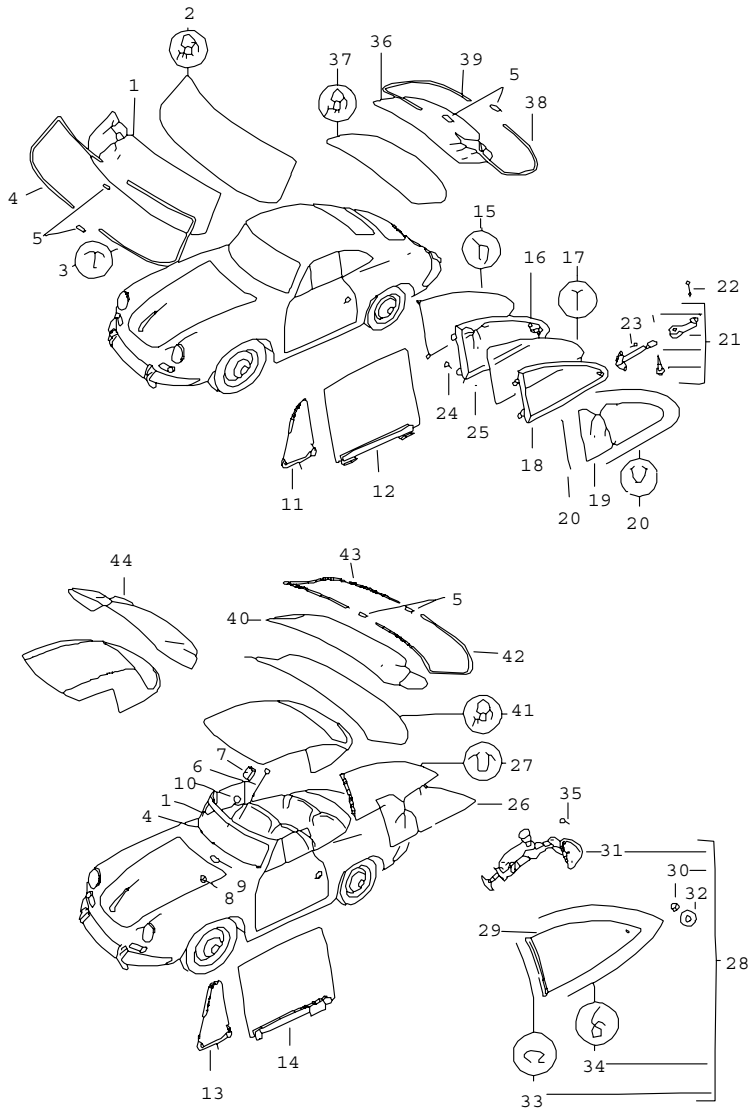

Pos	Part Number	Name	Remarks	Qty	Model
		windows - ROADSTER - see group 8/05/05			
1	644 541 101 00	windscreen		1	CABRIO HARDTOP
1	644 541 101 00	windscreen		1	356 B-T5: COUPE -REUTTER-
(1) E	644 541 101 50	windscreen heatable 6 + 12 VOLT		1	356 B-T5: CARRERA GT
1	644 541 101 06	windscreen		1	356 B-T6 356 C
(1)	644 541 101 11	windscreen complete green		1	356 B-T6 356 C COUPE -REUTTER-:M
(1) E	644 541 101 52	windscreen heatable 6 + 12 VOLT		1	356 B-T6 356 C COUPE -REUTTER- CARRERA GT
(1) E	644 541 101 16	windscreen upper green		1	356 B-T6: 356 C: COUPE -REUTTER- CARRERA :M
(1)	644 541 101 10	windscreen upper green		1	356 B-T6: 356 C: CABRIO HARDTOP
2	644 541 901 00	tread rubber		1	
2	644 541 901 00	tread rubber		1	356 B-T6: 356 C: COUPE -REUTTER-
(2)	644 541 901 00	tread rubber		1	356 B-T6: 356 C: COUPE -KARMANN-
3	644 541 911 00	trim frame-half	/L	1	356 B-T5

Pos	Part Number	Name	Remarks	Qty	Model
3	644 541 911 06	trim frame-half	/L	1	356 B-T6: 356 C: COUPE -REUTTER-
(3)	644 541 911 26	trim frame-half	/L	1	356 B-T6: 356 C: CABRIO HARDTOP
4	644 541 912 00	trim frame-half	/R	1	356 B-T5
4	644 541 912 06	trim frame-half	/R	1	356 B-T6: 356 C: COUPE -REUTTER-
(4)	644 541 912 26	trim frame-half	/R	1	356 B-T6: 356 C: CABRIO HARDTOP
5	644 541 921 00	covering plate		4	356 B-T5
5	644 541 921 06	covering plate		4	356 B-T6 356 C
6	644 541 231 20	clamp		1	CABRIO HARDTOP
7	E 644 731 150 21	clamp rear-view mirror		1	CABRIO HARDTOP
8	900 076 010 02	hexagon nut M 6		1	CABRIO HARDTOP
9	900 151 003 01	washer A 6,4		1	CABRIO HARDTOP
10	E 644 025 675 00	plug rubber		1	CABRIO HARDTOP
1+12	-	see group 8/04/05			COUPE HARDTOP
3+14	-	see group 8/04/10			CABRIO HARDTOP
15	644 543 903 00	tread rubber	/L	1	COUPE -REUTTER-
(15)	644 543 904 00	tread rubber	/R	1	COUPE -REUTTER-
16	E 644 543 001 00	side window complete with hinge	/L	1	COUPE -REUTTER-
(16)	E 644 543 002 00	side window complete with hinge	/R	1	COUPE -REUTTER-
17	644 543 905 00	rubber seal glass plate		2	COUPE -REUTTER-
18	E 644 543 023 00	glass plate	/L	1	COUPE -REUTTER-
(18)	E 644 543 024 00	glass plate	/R	1	COUPE -REUTTER-
19	644 543 101 00	side window	/L/R	2	COUPE -REUTTER-
(19)	644 543 101 11	rear glass green	/L/R	2	COUPE -REUTTER-:M
(19)	E 644 543 101 10	side window plexiglas		2	CARRERA 1600 GT
20	644 543 901 00	tread rubber 1250 MM	/L/R	2	COUPE -REUTTER-
21	E 644 543 041 00	hinge complete knob please state the colour	/L	1	COUPE -REUTTER-
(21)	E 644 543 042 00	hinge complete knob please state the colour	/R	1	COUPE -REUTTER-
(21)	644 543 041 30	hinge complete	/L	1	COUPE -KARMANN-
(21)	644 543 042 30	hinge complete	/R	1	COUPE -KARMANN-
-	E 644 543 491 30	rubber sleeve		2	COUPE -KARMANN-
22	E 900 055 025 12	rivet 3 X 20 chrome		2	COUPE -REUTTER-
23	900 140 001 02	rais. counters. h. tap. s. A 3,6 X 9,5		6	COUPE -REUTTER-
24	900 019 002 02	oval-head screw AM 4 X 8 chrome		8	COUPE -REUTTER-

Pos	Part Number	Name	Remarks	Qty	Model
25	900 070 001 02	cap nut M 4		8	COUPE -REUTTER-
-	E 644 543 101 16	rear glass plexiglas	/L/R	2	CARRERA 2000 GT
-	644 543 903 00	tread rubber	/L	1	CARRERA 2000 GT
-	644 543 904 00	tread rubber	/R	1	CARRERA 2000 GT
-	E 644 543 041 00	hinge complete	/L	1	CARRERA 2000 GT
-	E 644 543 042 00	hinge complete	/R	1	CARRERA 2000 GT
-	900 070 001 02	cap nut M 4 chrome		4 4	CARRERA 2000 GT
-	900 148 005 02	oval-head screw AM 4 X 12 chrome		4	CARRERA 2000 GT
-	999 591 010 12	washer GHE 32 652 chrome		4	CARRERA 2000 GT
-	900 145 003 02	rais. counters. h. tap. s. B 3,5 X 9,5 chrome		6	CARRERA 2000 GT
-	900 019 002 02	oval-head screw AM 4 X 8 chrome		8	CARRERA 2000 GT
-	900 070 001 02	cap nut M 4 chrome		16	CARRERA 2000 GT
-	E 900 148 004 02	rais. counters. h. tap. s. AM 4 X 10 chrome		8	CARRERA 2000 GT
-	999 591 010 12	washer GHE 32 652 chrome		8	CARRERA 2000 GT
26	E 644 543 101 60	side window	/L	1	356 B-T5: CABRIO HARDTOP
(26)	644 543 103 30	rear glass	/L	1	356 B-T5: COUPE -KARMANN-
(26)	E 644 543 102 60	side window	/R	1	356 B-T5: CABRIO HARDTOP
(26)	E 644 543 104 30	rear glass	/R	1	356 B-T5: COUPE -KARMANN-
-	E 644 543 203 30	moulding for rear glass		2	356 B-T5: COUPE -KARMANN-
-	E 644 543 201 30	windscreen sealing rear glass		2	356 B-T5: COUPE -KARMANN-
27	E 644 543 901 60	tread rubber		2	356 B-T5: CABRIO HARDTOP
(27)	E 644 543 093 30	tread rubber	/L	1	356 B-T5 COUPE -KARMANN-
(27)	E 644 543 094 30	tread rubber	/R	1	356 B-T5 COUPE -KARMANN-
-	E 900 145 007 02	rais. counters. h. tap. s. B 3,5 X 22 chrome		6	356 B-T5 COUPE -KARMANN-
-	E 644 543 911 30	moulding rear glass	/L	1	356 B-T5: COUPE -KARMANN-
-	E 644 543 912 30	moulding rear glass	/R	1	356 B-T5: COUPE -KARMANN-
-	E 644 543 913 30	sealing rubber		2	356 B-T5: COUPE -KARMANN-
-	E 900 139 001 00	counters. head tapp. screw B 2,9X 9,5		8	356 B-T5: COUPE -KARMANN-
28	E 644 543 003 61	rear glass complete with hinge	/L	1	356 B-T6: 356 C: CABRIO HARDTOP
(28)	644 543 004 61	rear glass complete with hinge	/R	1	356 B-T6: 356 C: CABRIO HARDTOP

Pos	Part Number	Name	Remarks	Qty	Model
29	E 644 543 013 60	rear glass	/L	1	356 B-T6: 356 C: CABRIO HARDTOP
(29)	E 644 543 014 60	rear glass	/R	1	356 B-T6: 356 C: CABRIO HARDTOP
30	E 644 543 491 26	rubber sleeve		2	356 B-T6: 356 C: CABRIO HARDTOP
31	644 543 041 30	hinge	/L	1	356 B-T6: 356 C: CABRIO HARDTOP
(31)	644 543 042 30	hinge	/R	1	356 B-T6: 356 C: CABRIO HARDTOP
32	E 644 543 493 26	plastic washer		4	356 B-T6: 356 C: CABRIO HARDTOP
33	E 644 543 201 60	windscreen sealing		2	356 B-T6: 356 C: CABRIO HARDTOP
34	E 644 543 903 61	tread rubber	/L	1	356 B-T6: 356 C: CABRIO HARDTOP
(34)	E 644 543 904 61	tread rubber	/R	1	356 B-T6: 356 C: CABRIO HARDTOP
35	900 145 003 02	rais. counters. h. tap. s. B 3,5 X 9,5 chrome		6	356 B-T: 356 C: CABRIO HARDTOP
36	644 545 101 00	rear window		1	356B-T5: COUPE
(36)	E 644 545 101 10	rear window plexiglas		1	CARRERA 1600 GT
36	644 545 101 06	rear window		1	356B-T6: 356 C: COUPE -REUTTER-
(36)	E 644 545 101 11	rear window complete green		1	356B-T6: 356 C: COUPE -REUTTER-:M
(36)	E 644 545 101 16	rear window plexiglas		1	CARRERA 2000 GT
37	644 545 901 00	tread rubber		1	COUPE -REUTTER-
37	644 545 901 06	tread rubber		1	356 B-T6: 356 C: COUPE -REUTTER-
(37)	644 545 901 06	tread rubber		1	356 B-T6: 356 C: COUPE -KARMANN-
38	644 545 911 00	trim frame-half	/L	1	356B-T5: COUPE -REUTTER-
38	644 545 911 06	trim frame-half	/L	1	356 B-T6: 356 C: COUPE -REUTTER-
39	644 545 912 00	trim frame-half	/R	1	356B-T5: COUPE -REUTTER-
39	644 545 912 06	trim frame-half	/R	1	356 B-T6 356 C
40	644 545 101 60	rear window		1	CABRIO HARDTOP
(40)	E 644 545 101 30	rear window		1	COUPE -KARMANN
41	E 644 545 901 60	tread rubber		1	CABRIO HARDTOP
(41)	E 644 545 901 30	tread rubber		1	COUPE -KARMANN-
42	E 644 545 911 60	trim frame-half	/L	1	356B-T5: CABRIO HARDTOP

Pos	Part Number	Name	Remarks	Qty	Model
42	E 644 545 911 61	trim frame-half	/L	1	356 B-T6 356 C CABRIO HARDTOP
(42)	E 644 545 911 30	trim frame-half	/L	1	356B-T5: COUPE -KARMANN-
(42)	E 644 545 911 36	trim frame-half	/L	1	356 B-T6 356 C COUPE -KARMANN
43	E 644 545 912 60	trim frame-half	/R	1	356B-T5: CABRIO HARDTOP
43	E 644 545 912 61	trim frame-half	/R	1	356 B-T6 356 C CABRIO HARDTOP
(43)	E 644 545 912 30	trim frame-half	/R	1	356B-T5 COUPE -KARMANN
(43)	E 644 545 912 36	trim frame-half	/R	1	356 B-T6 356 C COUPE -KARMANN-
44	E 644 545 101 21	rear window		1	CABRIO HARDTOP

- -- E N D -- -

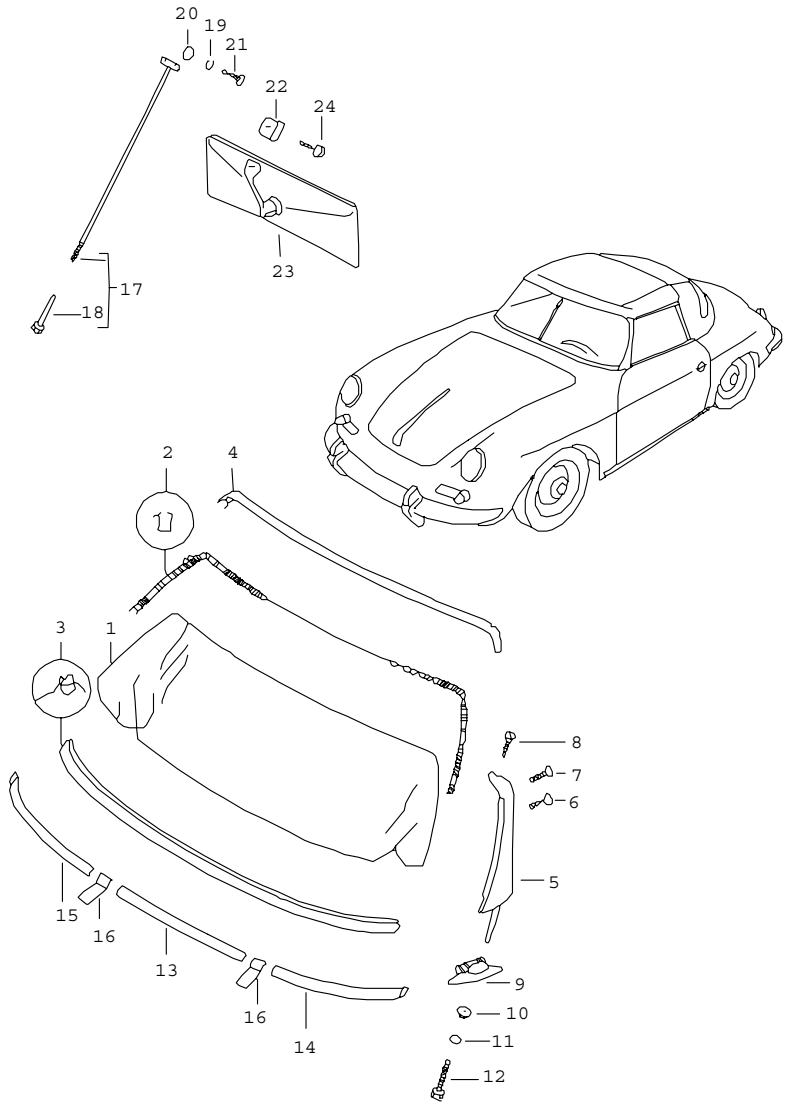

Pos	Part Number	Name	Remarks	Qty	Model
		windows door glass window guide see group 8/04/10			ROADSTER
1	644 541 101 45	windscreen		1	
2	644 541 901 41	tread rubber upper		1	
3	644 541 902 41	tread rubber lower		1	
4	E 644 541 201 41	windscreen frame upper chrome		1	
5	644 541 023 41	cowl panel support with pin F 86 831 >> F >> 87 315	/L	1	
(5)	644 541 024 41	cowl panel support with pin F 86 831 >> F >> 87 315	/R	1	
-	644 541 255 41	pin		2	
5	E 644 541 023 42	cowl panel support light alloy with pin F 87 316 >>	/L	1	
(5)	E 644 541 024 42	cowl panel support light alloy with pin F 87 316 >>		1	
6	E 900 013 005 00	countersunk-head screw AM 6 X 10 windscreen frame		2	
7	E 900 013 006 01	countersunk-head screw AM 6 X 12 windscreen frame		2	
8	E 644 541 275 42	oval-head screw F 87 826 >>		2	

Pos	Part Number	Name	Remarks	Qty	Model
9	644 541 261 41	rubber plate	/L	1	
(9)	644 541 262 41	rubber plate	/R	1	
10	E 900 026 002 00	washer 9,5		2	
11	900 027 005 01	lock ring A 8		2	
12	900 067 057 02	hexagon socket head bolt M 8 X 20		2	
13	644 541 913 41	moulding centre		1	
14	644 541 911 41	moulding	/L	1	
15	644 541 912 41	moulding	/R	1	
16	644 541 915 41	plate		2	
17	644 541 025 45	clamp with nut		1	
18	644 541 235 41	nut		1	
19	900 027 005 02	lock ring A 8		1	
20	900 025 007 02	washer 8,4		1	
21	900 148 002 02	rais. counters. h. tap. s. countersunk-head screw AM 4 X 6		2	
22	E 644 731 150 21	clamp		1	
23	E 644 731 101 01	interior mirror		1	
24	900 067 008 02	hexagon socket head bolt		1	
-	E 644 731 301 41	sun visor driver's side		1	
-	E 900 148 003 02	rais. counters. h. tap. s. countersunk-head screw AM 4 X 8 chrome		2	
-	E 644 731 331 41	support sun visor		4	
		- -- E N D -- -			

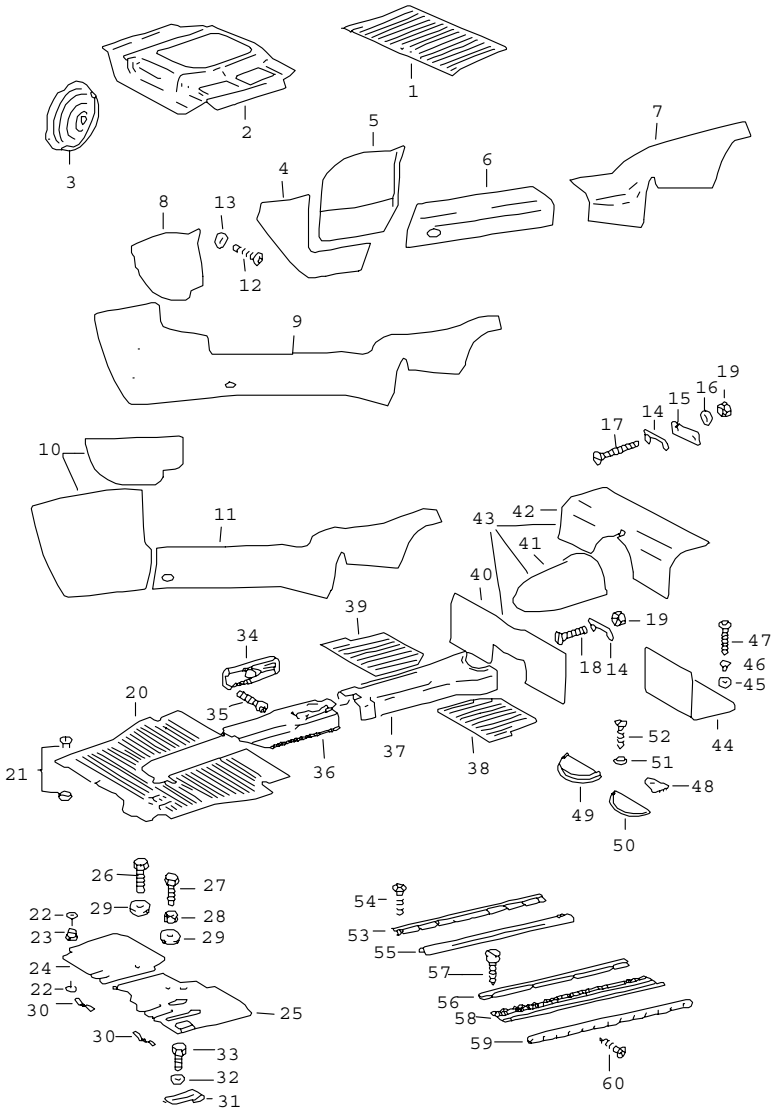

Pos	Part Number	Name	Remarks	Qty	Model
		linings footwell			
1	644 551 103 00	rubber base front trunk		1	356 B-T5
2	644 551 103 06	rubber base front trunk	/LL	1	356 B-T6 356 C
(2)	644 551 103 00	rubber base front trunk	/RL	1	356 B-T6 356 C
3	E 644 551 107 06	insert for emergency wheel		1	356 B-T6:M 356 C:M
(4)	E 644 551 403 00	carpet front part front	/L	1	356 B-T5 COUPE -REUTTER- CABRIO HARDTOP
(4)	E 644 551 401 41	carpet front part front	/L	1	ROADSTER
4	644 551 404 00	carpet front part front	/R	1	356 B-T5 COUPE -REUTTER- CABRIO HARDTOP
4	E 644 551 402 41	carpet front part front	/R	1	ROADSTER
(4)	E 644 551 403 15	carpet front part front	/L	1	CARRERA 1600 GT
(4)	E 644 551 404 15	carpet front part front	/R	1	CARRERA 1600 GT
-	E 644 551 403 15	carpet front part front	/L	1	CARRERA 2000 GT
-	E 644 551 404 15	carpet front part front	/R	1	CARRERA 2000 GT
(5)	E 644 551 041 00	carpet front part bag	/L	1	356 B-T5 COUPE -REUTTER- CABRIO HARDTOP

Pos	Part Number	Name	Remarks	Qty	Model
(5)	E 644 551 041 41	carpet front part bag	/L	1	ROADSTER
5	644 551 042 00	carpet front part bag	/R	1	356 B-T6 356 C COUPE -REUTTER- CABRIO HARDTOP
5	E 644 551 042 41	carpet front part bag	/R	1	ROADSTER
(5)	E 644 551 041 15	cover front part bag	/L	1	CARRERA 1600 GT
(5)	E 644 551 042 15	cover front part bag	/R	1	CARRERA 1600 GT
(6)	644 551 415 00	carpet side member centre	/L	1	356 B-T5 COUPE -REUTTER- CABRIO HARDTOP
(6)	E 644 551 415 41	carpet side member centre	/L	1	ROADSTER
6	644 551 416 00	carpet side member centre	/R	1	356 B-T5 COUPE -REUTTER- CABRIO HARDTOP
6	644 551 416 41	carpet side member centre	/R	1	ROADSTER
(6)	E 644 551 415 15	carpet side member centre	/L	1	CARRERA 1600 GT
(6)	E 644 551 416 15	carpet side member centre	/R	1	CARRERA 1600 GT
(7)	E 644 551 417 05	carpet side member rear	/L	1	356 B-T5 COUPE -REUTTER-
(7)	E 644 551 417 25	carpet side member rear	/L	1	356 B-T5 CABRIO HARDTOP
(7)	644 551 417 45	carpet side member rear	/L	1	ROADSTER
7	E 644 551 418 05	carpet side member rear	/R	1	356 B-T5 COUPE -REUTTER-
7	644 551 418 25	carpet side member rear	/R	1	356 B-T5 CABRIO HARDTOP
7	644 551 418 45	carpet side member rear	/R	1	ROADSTER
(7)	E 644 551 417 15	carpet side member rear	/L	1	CARRERA 1600 GT
(7)	E 644 551 418 15	carpet side member rear	/R	1	CARRERA 1600 GT
(8)	644 551 401 06	carpet front part	/L	1	356 B-T6 356 C COUPE -REUTTER- CABRIO HARDTOP
8	644 551 402 06	carpet front part	/R	1	356 B-T6 356 C COUPE -REUTTER- CABRIO HARDTOP
(9)	644 551 415 06	carpet side member	/L	1	356 B-T6 356 C COUPE -REUTTER-
(9)	644 551 415 26	carpet side member	/L	1	356 B-T6 356 C CABRIO HARDTOP
9	644 551 416 06	carpet side member	/R	1	356 B-T6 356 C COUPE -REUTTER-
9	644 551 416 26	carpet side member	/R	1	356 B-T6 356 C CABRIO HARDTOP

Pos	Part Number	Name	Remarks	Qty	Model
(10)	644 551 041 30	carpet front part bag damping mat	/L	1	356 B-T6 356 C COUPE -KARMANN-
10	E 644 551 042 30	carpet front part bag damping mat	/R	1	356 B-T6 356 C COUPE -KARMANN-
(10)	E 644 551 041 15	cover front part bag	/L	1	CARRERA 2000 GT
(10)	E 644 551 042 15	cover front part bag	/R	1	CARRERA 2000 GT
(11)	E 644 551 415 30	carpet side member damping mat	/L	1	356 B-T6 356 C COUPE -KARMANN-
11	E 644 551 416 30	carpet side member damping mat	/R	1	356 B-T6 356 C COUPE -KARMAN-
(11)	E 644 551 415 15	carpet side member centre	/L	1	CARRERA 2000 CARRERA 2000 GT
(11)	E 644 551 416 15	carpet side member centre	/R	1	CARRERA 2000 GT
12	900 145 002 02	rais. counters. h. tap. s. B 2,9 X 9,5		6	356 B-T6 356 C COUPE -REUTTER- CABRIO HARDTOP
				2	356 B-T6 356 C COUPE -KARMANN-
13	E 999 591 005 12	washer		6	356 B-T6 356 C COUPE -REUTTER- CABRIO HARDTOP
				2	356 B-T6 356 C COUPE -KARMANN-
14	E 644 025 172 00	clamp		4	
15	E 644 025 175 00	plate		2	COUPE -REUTTER-
16	900 151 003 02	washer A 6,4		4	CABRIO HARDTOP ROADSTER
17	E 900 019 008 02	oval-head screw M 5 X 50		4	
18	900 019 006 02	oval-head screw M 5 X 20		4	
19	900 076 005 02	hexagon nut M 5		8	
20	644 551 101 06	rubber base front	/LL	1	356 B-T5
(20)	644 551 102 05	rubber base front	/RL	1	356 B-T5
20	644 551 101 06	rubber base front	/LL	1	356 B-T6 356 C
(20)	E 644 551 102 06	rubber base front	/RL	1	356 B-T6 356 C
21	999 591 806 12	push button GHE BXIII/394		4	356B-T5
21	E 999 591 807 12	push button GHE K 000 478		4	356 B-T6 356 C
22	E -	tubular rivet GHE 32 426		4	
23	999 591 805 12	push button GHE 30 213		4	
24	644 551 064 05	pedal floor board right	/LL	1	356 B-T5
(24)	E 644 551 066 05	pedal floor board right	/RL	1	
24	644 551 064 06	pedal floor board right	/LL	1	356 B-T6 356 C
25	E 644 551 063 05	pedal floor board left	/LL	1	356 B-T5
(25)	E 644 551 065 05	pedal floor board left	/RL	1	

Pos	Part Number	Name	Remarks	Qty	Model
25	644 551 063 06	pedal floor board left	/LL	1	356 B-T6 356 C
26	900 378 030 09	hexagon-head bolt M 6 X 20		1	
27	900 075 020 02	hexagon-head bolt M 6 X 45		1	
28	900 076 011 02	hexagon nut M 6		1	
29	999 151 003 01	washer		2	
30	E 644 551 631 00	spring		2	
31	644 551 640 00	stop clutch pedal		1	
32	N 011 524 7	washer 6,4		2	
33	N 010 215 13	hexagon-head bolt M 6 X 15		2	
34	644 572 710 03	slide heating		2	
35	E 900 143 003 02	oval-head sheetmetal screw B 3,5 X 16		8	
36	E 644 551 015 05	rubber base tunnel		1	356 B-T5
36	644 551 015 06	rubber base tunnel		1	356 B-T6 356 C
-	E 644 551 015 07	rubber base tunnel		1	356 C
37	E 644 551 411 05	carpet tunnel		1	356 B-T5 COUPE -REUTTER- CABRIO HARDTOP
37	E 644 551 411 45	carpet tunnel		1	356 B-T5 ROADSTER
37	644 551 411 06	carpet tunnel		1	356 B-T6 356 C COUPE -REUTTER- CABRIO HARDTOP
(37)	E 644 551 411 36	carpet tunnel		1	356 B-T6 356 C COUPE -KARMANN-
37	E 644 551 411 46	carpet tunnel		1	356 B-T6 356 C ROADSTER
(37)	E 644 551 411 15	carpet tunnel		1	CARRERA 1600 GT
(37)	E 644 551 411 16	cover tunnel		1	CARRERA 2000 GT
38	644 551 121 00	rubber base back seat left		1	356 B-T5
38	E 644 551 121 06	rubber base back seat left		1	356 B-T6 356 C
39	644 551 122 00	rubber base back seat right		1	356 B-T5
39	644 551 122 06	rubber base back seat right		1	356 B-T6 356 C
40	644 551 423 05	carpet heel plate		1	COUPE -REUTTER- CABRIO HARDTOP
40	E 644 551 423 45	carpet heel plate		1	ROADSTER
(40)	E 644 551 423 15	carpet heel plate		1	CARRERA GT
41	644 551 433 05	carpet back seat		1	COUPE -REUTTER- CABRIO HARDTOP
41	E 644 551 437 45	carpet back seat		1	ROADSTER
-	E 644 551 435 15	carpet back seat		1	CARRERA GT
42	644 551 431 05	carpet rear covering		1	COUPE -REUTTER-
42	644 551 431 25	carpet rear covering		1	CABRIO HARDTOP

Pos	Part Number	Name	Remarks	Qty	Model
42	E 644 551 435 45	carpet rear covering		1	ROADSTER
(42)	E 644 551 431 15	carpet rear covering		1	CARRERA GT
43	E 644 551 431 30	carpet rear covering damping mat		1	356 B-T6 356 C COUPE -KARMANN-
44	644 551 441 05	carpet backrest	/L	1	COUPE
44	644 551 441 25	carpet backrest	/L	1	CABRIO HARDTOP
(44)	644 551 442 05	carpet backrest	/R	1	COUPE
(44)	E 644 551 442 25	carpet backrest	/R	1	CABRIO HARDTOP
44	644 551 441 07	carpet backrest	/L	1	CARRERA 2000 COUPE -REUTTER-
44	644 551 441 27	carpet backrest	/L	1	CARRERA 2000 CABRIO HARDTOP
(44)	644 551 442 07	carpet backrest	/R	1	CARRERA 2000 COUPE -REUTTER-
(44)	644 551 442 27	carpet backrest	/R	1	CARRERA 2000 CABRIO HARDTOP
45	E 644 025 143 00	washer		4	
46	999 591 010 12	washer GHE 32 652		4	
47	900 145 006 02	rais. counters. h. tap. s. B 3,5 X 19		4	
48	E 644 504 737 05	fastening clip cover		2	356 B-T6 356 C COUPE -KARMANN-
49	644 551 425 05	carpet cover		1	
(49)	E 644 551 425 15	carpet cover		1	CARRERA GT
50	644 504 075 05	carpet cover		1	
51	E 644 025 142 00	washer		2	
52	E 900 018 012 02	oval-head screw M 6 X 25		2	
53	644 551 117 00	scuff plate	/L	1	
(53)	644 551 117 00	scuff plate	/R	1	
54	900 145 003 02	rais. counters. h. tap. s. B 3,5 X 9,5		18	
55	644 551 915 00	rubber seal		2	
56	644 551 917 00	door sill rail		2	
57	E N 013 958 7	tapping screw B 3,5 X 13		8	COUPE -REUTTER- CABRIO HARDTOP
(57)	N 013 957 5	tapping screw B 3,5 X 9,5		8	ROADSTER
58	644 551 115 00	rubber base entrance lining	/L	1	
(58)	644 551 116 00	rubber base entrance lining	/R	1	
59	644 551 119 00	rail	/L	1	
(59)	644 551 120 00	rail	/R	1	
60	900 145 002 02	rais. counters. h. tap. s. B 2,9 X 9,5		26	
-	E 644 803 021 45	roll-over bar		1	CARRERA
-	000 551 571 00	carpet running meter		X	
	000	red			
	200	green			
	300	blue			
	400	brown			
	500	beige			
	600	grey			
	700	anthracite			

Pos	Part Number	Name	Remarks	Qty	Model	Pos	Part Number	Name	Remarks	Qty	Model
		- -- E N D -- -									

Model	Year	MG	SG	Illustration	Restrictions	Update	13:18	27.10.2005	PORSCHE PET PORSCHE
356	65	8	07	807-05		194			

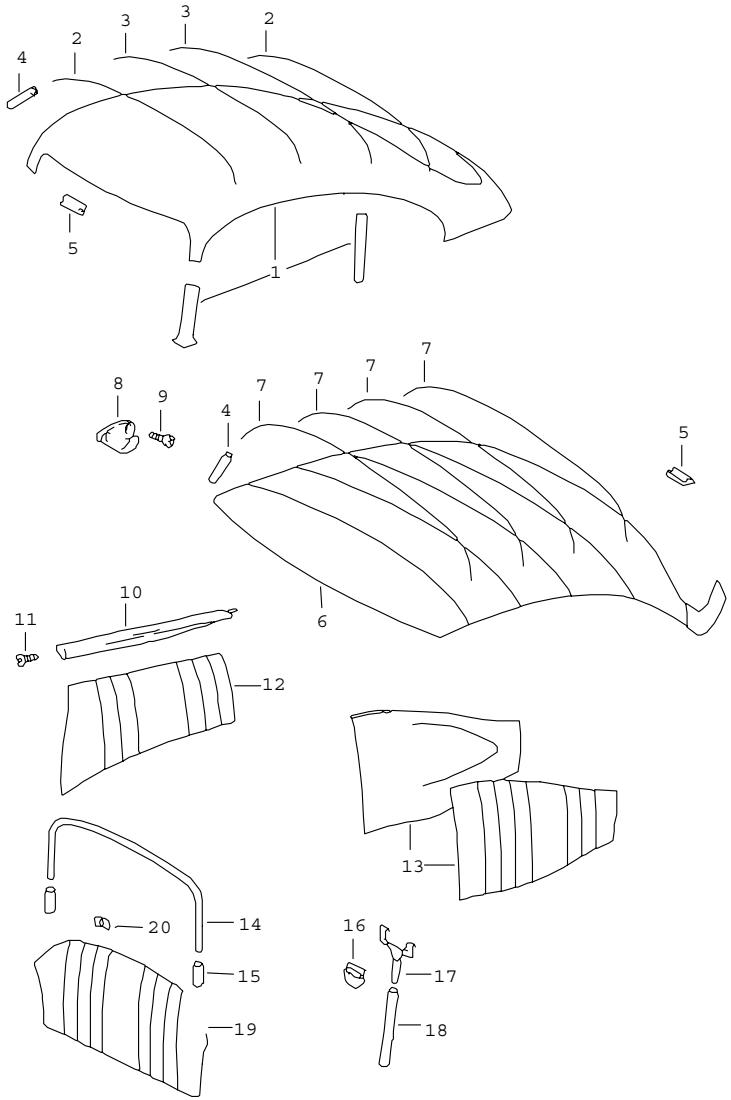

Pos	Part Number	Name	Remarks	Qty	Model
		linings interior equipment			COUPE -REUTTER- COUPE -KARMANN-
1	E 644 555 501 00	roof lining beige		1 1	356 B-T5: COUPE -REUTTER- 356 B-T6 356 C COUPE -REUTTER-
(1)	644 555 501 06	roof lining sunroof		1	356 B-T6 356 C COUPE -REUTTER
-	E 644 564 907 50	zip		1	356 B-T6 356 C COUPE -REUTTER-
2	E 644 555 511 00	transverse strut long		2	COUPE -REUTTER-
3	E 644 555 513 00	transverse strut short		2	COUPE -REUTTER-
4	644 555 515 00	rubber profile		8	
5	999 591 321 01	clamp GHE 76 162		16	COUPE -REUTTER-
5	999 591 321 01	clamp GHE 76 162		11	COUPE -KARMANN-
6	E 644 555 501 30	roof lining		1	356 B-T5 COUPE -KARMANN-
6	E 644 555 501 31	roof lining		1	356 B-T6 356 C COUPE -KARMANN-
(6)	E 644 555 501 26	roof lining sunroof		1	356 B-T6 356 C COUPE -KARMANN-
-	E 644 564 907 50	zip		1	356 B-T6 356 C COUPE -KARMANN-
7	E 644 555 511 60	transverse strut		4	COUPE -KARMANN-

Pos	Part Number	Name	Remarks	Qty	Model
8	644 552 871 00	coat hook		2	COUPE -REUTTER-
8	PCG 552 871 00	coat hook		2	COUPE -REUTTER-
9	E 900 143 005 02	oval-head sheetmetal screw		2	COUPE -REUTTER-
(10)	E 644 555 731 05	ornamental strip interior panel	/L	1	356 B-T5 COUPE -REUTTER-
10	E 644 555 732 05	ornamental strip interior panel	/R	1	356 B-T5 COUPE -REUTTER-
(10)	E 644 555 093 05	ornamental strip interior panel please state the colour	/L	1	356 B-T6 356 C COUPE -REUTTER-
10	E 644 555 094 05	ornamental strip interior panel please state the colour	/R	1	356 B-T6 356 C COUPE -REUTTER-
(10)	644 555 093 06	ornamental strip interior panel please state the colour	/L	1	CARRERA 2000 COUPE -REUTTER-
10	644 555 094 06	ornamental strip interior panel please state the colour	/R	1	CARRERA 2000 COUPE -REUTTER-
11	E 900 140 004 02	rais. counters. h. tap. s. B 3,5 X 13		2	COUPE -REUTTER-
(11)	E 900 145 010 02	rais. counters. h. tap. s. B 3,9 X 32		4	COUPE -KARMANN-
(12)	644 555 073 05	interior panel	/L	1	COUPE -REUTTER-
12	644 555 074 05	interior panel	/R	1	COUPE -REUTTER-
(12)	E 644 555 073 15	interior panel	/L	1	CARRERA GT
(12)	E 644 555 074 15	interior panel	/R	1	CARRERA GT
(13)	E 644 555 007 30	lining wheel housing please state the colour		1	COUPE -KARMANN-
(13)	644 555 008 30	lining wheel housing please state the colour		1	COUPE -KARMANN-
14	644 572 421 06	pipe		1	356 B-T5: COUPE -REUTTER-
14	644 572 421 06	pipe		1	356 B-T6 356 C COUPE -REUTTER-
(14)	E 644 572 421 30	pipe		1	COUPE -KARMANN-
15	644 572 423 05	connecting hose		2	
16	E 644 572 443 06	cover		2	CARRERA 2000
17	E 644 572 441 06	heating tube		2	CARRERA 2000
18	E 644 572 911 07	hose		2	CARRERA 2000
19	644 555 075 05	back wall lining		1	356 B-T5: COUPE -REUTTER-
19	E 644 555 075 06	back wall lining		1	356 B-T6 356 C COUPE -REUTTER-
(19)	E 644 555 075 15	back wall lining		1	CARRERA 1600 GT
(19)	E 644 555 075 16	back wall lining		1	356 B-T6: CARRERA
19	E 644 555 075 07	back wall lining		1	356 C: CARRERA
20	999 507 212 01	nut GHE 32 673		11	

- -- E N D -- -

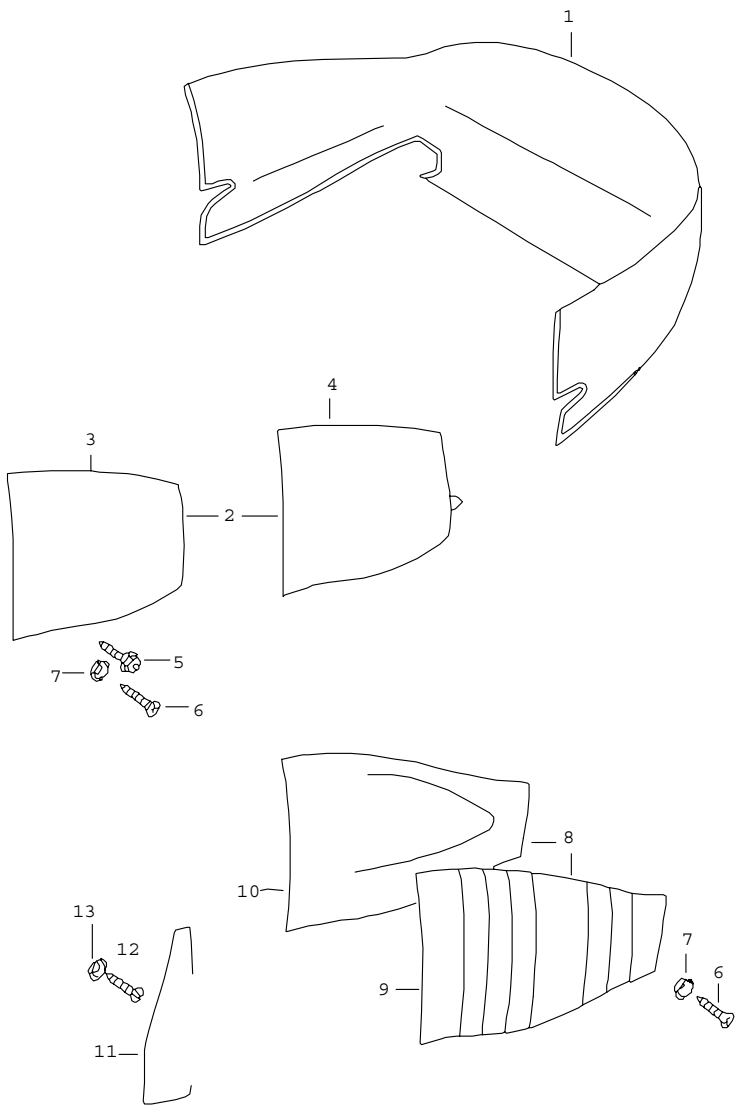

Pos	Part Number	Name	Remarks	Qty	Model
		linings interior equipment			CABRIO HARDTOP
1	644 551 043 25	carpet rear covering		1	
(2)	E 644 555 007 25	lining complete	/L	1	
2	E 644 555 008 25	lining complete	/R	1	
(3)	E 644 555 851 25	cover leatherette	/L	1	
3	E 644 555 852 25	cover leatherette	/R	1	
(4)	E 644 555 087 25	lining	/L	1	
4	E 644 555 088 25	lining	/R	1	
5	E 999 591 602 12	tapping screw		2	CABRIO
6	900 148 014 02	lens-head screw AM 6 X 15		2	
7	E 644 555 857 00	washer		2	
(8)	E 644 555 007 65	lining wheel housing complete	/L	1	HARDTOP
8	E 644 555 008 65	lining wheel housing complete	/R	1	HARDTOP
(9)	E 644 555 851 65	cover leatherette	/L	1	HARDTOP
9	E 644 555 852 65	cover leatherette	/R	1	HARDTOP
(10)	E 644 555 087 65	lining wheel housing	/L	1	HARDTOP
10	E 644 555 088 65	lining wheel housing	/R	1	HARDTOP
(11)	E 644 555 073 25	lining centre pillar	/L	1	
11	E 644 555 074 25	lining centre pillar	/R	1	
12	E 900 140 004 02	lens-head screw B 3,5 X 13		2	

Pos	Part Number	Name	Remarks	Qty	Model	Pos	Part Number	Name	Remarks	Qty	Model
13	999 591 804 12	push button lower part GHE 30 212		2	CABRIO						
		- -- E N D -- -									

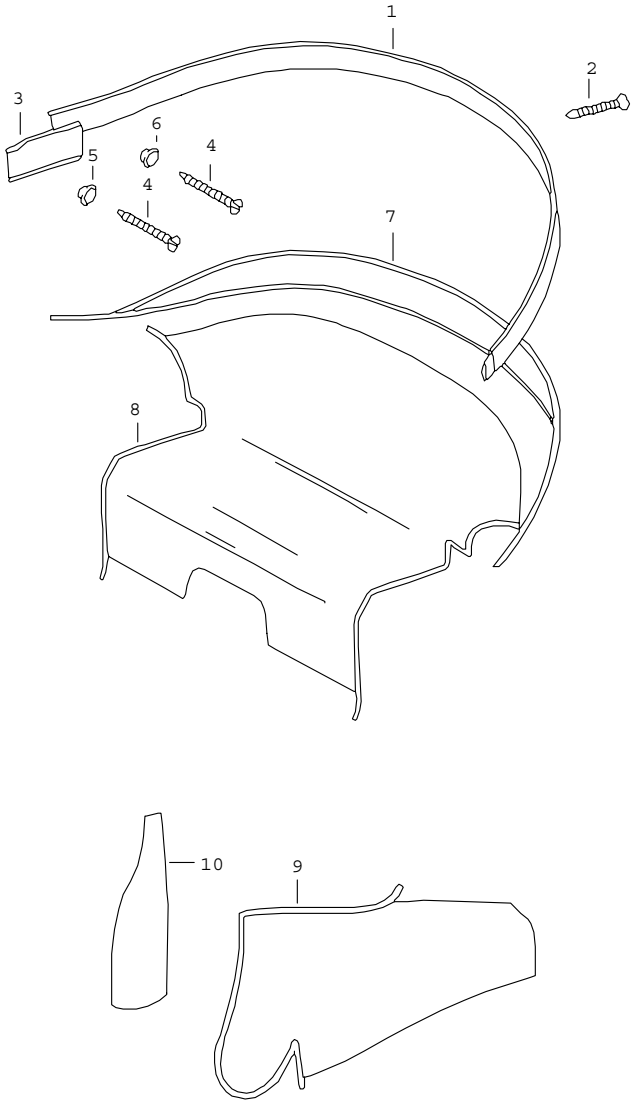

Pos	Part Number	Name	Remarks	Qty	Model
		linings interior equipment			ROADSTER
1	E 644 555 077 41	strip complete		1	
2	N 013 957 5	tapping screw B 3,5 X 9,5		34	
(3)	E 644 561 075 45	cover plate complete	/L	1	
3	E 644 561 076 45	cover plate complete	/R	1	
4	E 900 145 012 02	rais. counters. h. tap. s. B 4,2 X 32		4	
5	E 999 591 103 12	washer GHE 32 643		2	
6	-	washer GHE BX III/1234 $ 4,2 MM		4	
7	E 644 551 431 45	carpet rear covering upper		1	
8	E 644 551 433 45	carpet rear covering lower		1	
(9)	644 551 427 41	carpet wheel housing panel	/L	1	
9	644 551 428 41	carpet wheel housing panel	/R	1	
(10)	E 644 555 083 45	lining centre pillar	/L	1	
10	E 644 555 084 45	lining centre pillar	/R	1	
		- -- E N D -- -			

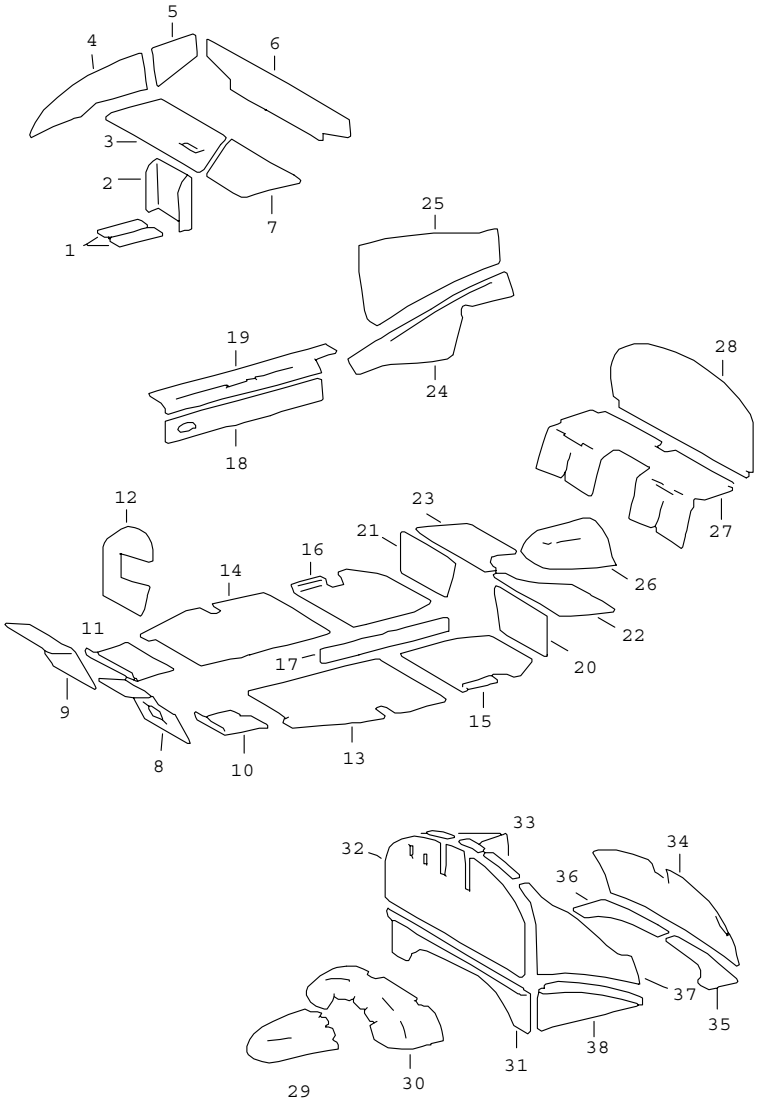

Pos	Part Number	Name	Remarks	Qty	Model
		body damping mat			356 B T5
1	E 644 556 117 01	insulation battery		2	
2	E 644 556 111 01	insulation cross panel front		1	
3	E 644 556 101 01	insulation boot floor plate		1	
(4)	E 644 556 103 05	insulation front trunk front	/L	1	
4	E 644 556 104 05	insulation front trunk front	/R	1	
(5)	E 644 556 105 05	insulation front trunk rear	/L	1	
5	E 644 556 106 05	insulation front trunk rear	/R	1	
6	E 644 556 115 01	insulation front trunk rear		1	
7	E 644 556 151 01	insulation cover		1	
8	E 644 556 201 01	insulation pedal floor board left		1	
9	E 644 556 202 01	insulation pedal floor board right		1	
10	E 644 556 505 01	insulation footwell left		1	
11	E 644 556 506 01	insulation footwell right		1	
(12)	E 644 556 211 01	insulation door	/L	1	
(12)	644 556 211 30	insulation door	/L	1	COUPE -KARMANN-

Pos	Part Number	Name	Remarks	Qty	Model
12	E 644 556 212 01	insulation door	/R	1	
(12)	644 556 212 30	insulation door	/R	1	COUPE -KARMANN-
13	644 556 501 01	insulation footwell centre left		1	
14	644 556 502 01	insulation footwell centre right		1	
15	E 644 556 503 01	insulation footwell rear left		1	
16	E 644 556 504 01	insulation footwell rear right		1	
17	E 644 556 511 01	insulation tunnel		2	
(18)	E 644 556 301 05	insulation side member inner	/L	1	
18	E 644 556 302 05	insulation side member inner	/R	1	
(19)	E 644 556 303 05	insulation side member upper	/L	1	
19	E 644 556 304 05	insulation side member upper	/R	1	
20	E 644 556 305 01	insulation heel plate left		2	
(20)	644 556 305 30	insulation heel plate		1	COUPE -KARMANN
21	E 644 556 306 01	insulation heel plate right		2	
(21)	644 556 305 30	insulation heel plate		1	COUPE -KARMANN-
22	E 644 556 307 05	insulation back seat upper left		1	
23	E 644 556 308 05	insulation back seat upper right		1	
(24)	E 644 556 315 05	insulation side member rear	/L	1	COUPE -REUTTER-
24	E 644 556 316 05	insulation side member rear	/R	1	COUPE -REUTTER-
(24)	E 644 556 315 25	insulation side member rear	/L	1	CABRIO HARDTOP
(24)	E 644 556 316 25	insulation side member rear	/R	1	CABRIO HARDTOP
(25)	E 644 556 601 01	insulation wheel housing panel rear	/L	1	COUPE -REUTTER-
25	E 644 556 602 01	insulation wheel housing panel rear	/R	1	COUPE -REUTTER-
(25)	E 644 556 601 21	insulation wheel housing panel rear	/L	1	CABRIO HARDTOP
(25)	E 644 556 602 21	insulation wheel housing panel rear	/R	1	CABRIO HARDTOP
26	E 644 556 309 05	insulation floorpan back seat upper centre		2	
27	E 644 556 311 05	insulation boot floor plate		1	
28	E 644 556 603 01	insulation interior panel		1	COUPE -REUTTER-
(28)	E 644 556 603 21	insulation interior panel lower		1	COUPE -KARMANN-

Pos	Part Number	Name	Remarks	Qty	Model
(28)	E 644 556 604 21	insulation interior panel upper		1	COUPE -KARMANN-
29	E 644 556 322 01	insulation floorpan back seat front		1	
(29)	644 556 322 30	insulation floorpan back seat front		1	COUPE -KARMANN-
30	E 644 556 321 01	insulation floorpan back seat rear		1	
(30)	644 556 321 30	insulation floorpan back seat rear		1	COUPE -KARMANN-
31	E 644 556 802 01	insulation engine compartment front lower		1	
32	E 644 556 981 05	insulation engine compartment front		1	COUPE -REUTTER-
(32)	E 644 556 981 25	insulation engine compartment front		1	CABRIO HARDTOP
(32)	644 556 801 30	insulation engine compartment front		1	COUPE -KARMANN-
33	E 644 556 803 01	insulation engine compartment front upper		1	COUPE -REUTTER-
(33)	E 644 556 803 21	insulation engine compartment front upper		1	COUPE -KARMANN-
34	E 644 556 811 01	insulation engine compartment rear		1	
35	E 644 556 817 01	insulation engine compartment cover left		1	
36	E 644 556 818 01	insulation engine compartment cover right		1	
37	E 644 556 813 01	insulation engine compartment lateral upper	/L	1	COUPE -REUTTER-
(37)	E 644 556 814 01	insulation engine compartment lateral upper	/R	1	COUPE -REUTTER-
(37)	E 644 556 813 25	insulation engine compartment lateral upper	/L	1	CABRIO HARDTOP
(37)	E 644 556 814 25	insulation engine compartment lateral upper	/R	1	CABRIO HARDTOP
(37)	644 556 817 30	insulation engine compartment		1	COUPE -KARMANN-
38	E 644 556 815 01	insulation engine compartment lateral lower	/L	1	
(38)	E 644 556 816 01	insulation engine compartment lateral lower	/R	1	
(38)	644 556 817 30	insulation engine compartment		1	COUPE -KARMANN-
-	644 556 953 30	sound absorbing plate rear wall		1	COUPE
-	644 556 963 30	filler piece rear wall		1	COUPE -KARMANN-
-	644 556 919 30	wedge transmission		1	COUPE -KARMANN-
-	644 556 921 30	wedge back seat		1	COUPE -KARMANN-
-	644 556 807 30	filler piece engine compartment front		1	COUPE -KARMANN-
-	644 556 809 30	filler piece engine compartment upper left		1	COUPE -KARMANN-

Pos	Part Number	Name	Remarks	Qty	Model	Pos	Part Number	Name	Remarks	Qty	Model
-	644 556 810 30	filler piece engine compartment upper right		1	COUPE -KARMANN-						
-	900 144 009 00	counters. head tapp. screw B 2,9 X 13		1	COUPE -KARMANN-						
-	E 999 591 101 12	washer GHE 32 641		1	COUPE -KARMANN-						
		- -- E N D -- -									

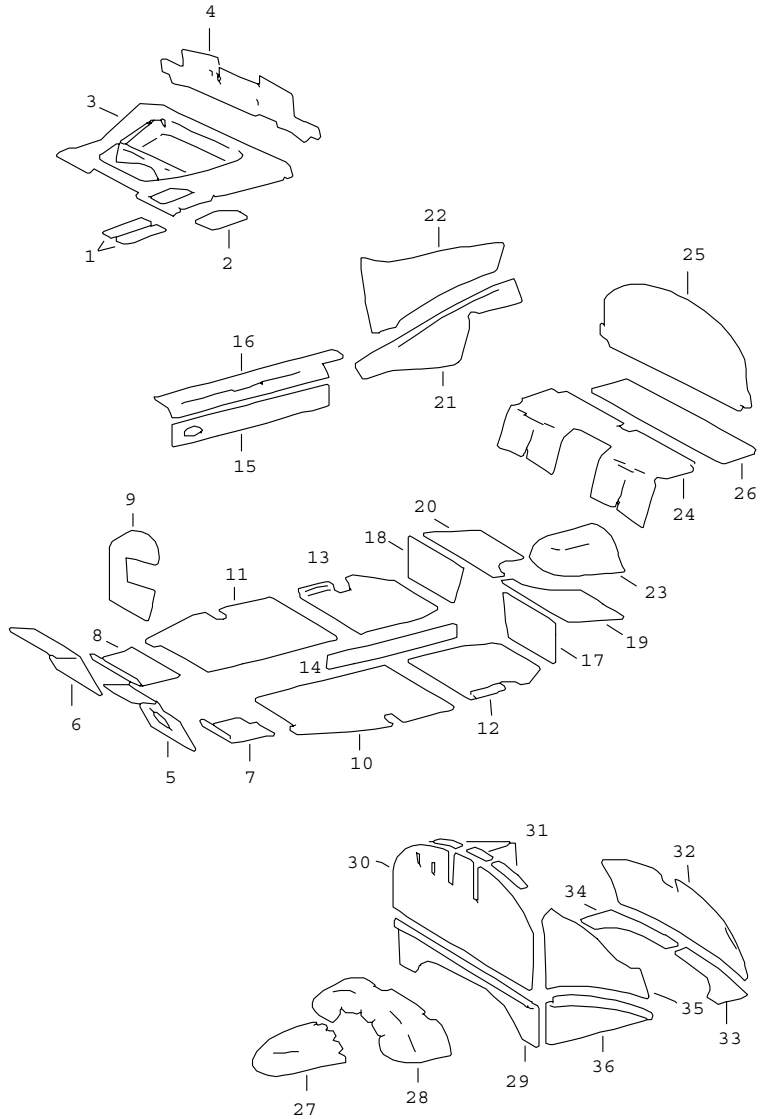

Pos	Part Number	Name	Remarks	Qty	Model
		body damping mat			356 B-T6 356 C
1	E 644 556 117 36	insulation battery		5	
2	E 644 556 151 06	insulation cover	/LL	1	
(2)	644 556 151 38	insulation cover	/RL	1	
3	E 644 556 101 06	insulation fuel tank support	/LL	1	
(3)	E 644 556 101 38	insulation fuel tank support	/RL	1	
4	E 644 556 115 36	insulation front trunk rear	/LL	1	
(4)	E 644 556 115 38	insulation front trunk rear	/RL	1	
5	E 644 556 201 06	insulation pedal floor board left	/LL	1	
(5)	E 644 556 201 08	insulation pedal floor board left	/RL	1	
6	E 644 556 202 06	insulation pedal floor board right	/LL	1	
(6)	644 556 202 08	insulation pedal floor board right	/RL	1	
(5)	644 556 201 36	insulation pedal floor board left	/LL	1	COUPE -KARMANN-
(5)	644 556 201 38	insulation pedal floor board left	/RL	1	COUPE -KARMANN-
(6)	644 556 202 36	insulation pedal floor board right	/LL	1	COUPE -KARMANN-
(6)	644 556 202 38	insulation pedal floor board right	/RL	1	COUPE -KARMANN-

Pos	Part Number	Name	Remarks	Qty	Model
7	E 644 556 505 01	insulation footwell left		1	
8	E 644 556 506 01	insulation footwell right		1	
(9)	E 644 556 211 01	insulation door	/L	1	
(9)	644 556 211 30	insulation door	/L	1	COUPE -KARMANN-
9	E 644 556 212 01	insulation door	/R	1	
(9)	644 556 212 30	insulation door	/R	1	COUPE -KARMANN-
10	E 644 556 501 06	insulation footwell centre left		1	
11	E 644 556 502 06	insulation footwell centre right		1	
(10)	E 644 556 501 36	insulation footwell centre left		1	COUPE -KARMANN-
(11)	E 644 556 502 36	insulation footwell centre right		1	COUPE -KARMANN-
12	E 644 556 503 06	insulation footwell rear left		2	
13	E 644 556 504 06	insulation footwell rear right		2	
14	E 644 556 511 01	insulation tunnel		2	
(15)	E 644 556 301 05	insulation side member inner	/L	1	
15	E 644 556 302 05	insulation side member inner	/R	1	
(16)	E 644 556 303 05	insulation side member upper	/L	1	
16	E 644 556 304 05	insulation side member upper	/R	1	
17	E 644 556 305 01	insulation heel plate left		2	
(17)	644 556 305 30	insulation heel plate		1	COUPE -KARMANN-
18	E 644 556 306 01	insulation heel plate right		2	
(18)	644 556 305 30	insulation heel plate		1	COUPE -KARMANN-
19	E 644 556 307 05	insulation back seat upper left		1	
20	E 644 556 308 05	insulation back seat upper right		1	
(21)	E 644 556 315 05	insulation side member rear	/L	1	COUPE -REUTTER-
21	E 644 556 316 05	insulation side member rear	/R	1	COUPE -REUTTER-
(21)	E 644 556 315 25	insulation side member rear	/L	1	CABRIO HARDTOP
(21)	E 644 556 316 25	insulation side member rear	/R	1	CABRIO HARDTOP
(22)	E 644 556 601 06	insulation wheel housing panel rear	/L	1	COUPE -REUTTER-
22	E 644 556 602 06	insulation wheel housing panel rear	/R	1	COUPE -REUTTER-

Pos	Part Number	Name	Remarks	Qty	Model
(22)	E 644 556 601 21	insulation wheel housing panel rear	/L	1	CABRIO HARDTOP
(22)	E 644 556 602 21	insulation wheel housing panel rear	/R	1	CABRIO HARDTOP
(22)	644 556 601 30	insulation wheel housing panel rear	/L	1	COUPE -KARMANN-
(22)	644 556 602 30	insulation wheel housing panel rear	/R	1	COUPE -KARMANN-
23	E 644 556 309 05	insulation floorpan back seat upper centre		2	
24	E 644 556 311 05	insulation boot floor plate		1	
25	E 644 556 603 06	insulation interior panel		1	COUPE -REUTTER-
(25)	E 644 556 603 21	insulation interior panel lower		1	COUPE -KARMANN-
(25)	E 644 556 604 21	insulation interior panel upper		1	COUPE -KARMANN-
26	E 644 556 967 05	insulation boot floor plate		1	
27	E 644 556 322 01	insulation floorpan back seat front		1	
(27)	644 556 322 30	insulation floorpan back seat front		1	COUPE -KARMANN-
28	E 644 556 321 01	insulation floorpan back seat rear		1	
(28)	644 556 321 30	insulation floorpan back seat rear		1	COUPE -KARMANN-
29	E 644 556 802 01	insulation engine compartment front lower		1	
30	E 644 556 981 06	insulation engine compartment front		1	COUPE -REUTTER-
(30)	E 644 556 981 25	insulation engine compartment front		1	CABRIO HARDTOP
(30)	644 556 801 30	insulation engine compartment front		1	COUPE -KARMANN-
31	E 644 556 803 06	insulation engine compartment front upper		1	COUPE -REUTTER-
(31)	E 644 556 803 25	insulation engine compartment front upper		1	CABRIO HARDTOP
(31)	644 556 803 30	insulation engine compartment front upper	/L	1	COUPE -KARMANN-
(31)	644 556 804 30	insulation engine compartment front upper	/R	1	COUPE -KARMANN-
32	E 644 556 811 06	insulation engine compartment rear		1	COUPE -REUTTER-
(32)	E 644 556 811 26	insulation engine compartment rear		1	CABRIO HARDTOP
(32)	644 556 811 36	insulation engine compartment rear		1	COUPE -KARMANN-
33	E 644 556 817 01	insulation engine compartment cover left		1	
34	E 644 556 818 01	insulation engine compartment cover right		1	

Pos	Part Number	Name	Remarks	Qty	Model
35	E 644 556 813 06	insulation engine compartment lateral upper	/L	1	COUPE -REUTTER-
(35)	E 644 556 814 06	insulation engine compartment lateral upper	/R	1	COUPE -REUTTER-
(35)	E 644 556 813 25	insulation engine compartment lateral upper	/L	1	CABRIO HARDTOP
(35)	E 644 556 814 25	insulation engine compartment lateral upper	/R	1	CABRIO HARDTOP
(35)	644 556 817 30	insulation engine compartment		1	COUPE -KARMANN-
-	E 644 556 971 05	strap 20/20		X	
36	E 644 556 815 01	insulation engine compartment lateral lower	/L	1	
(36)	E 644 556 816 01	insulation engine compartment lateral lower	/R	1	
(36)	644 556 817 30	insulation engine compartment	NN-	1	COUPE -KARMA
		- -- E N D -- -			

Pos	Part Number	Name	Remarks	Qty	Model

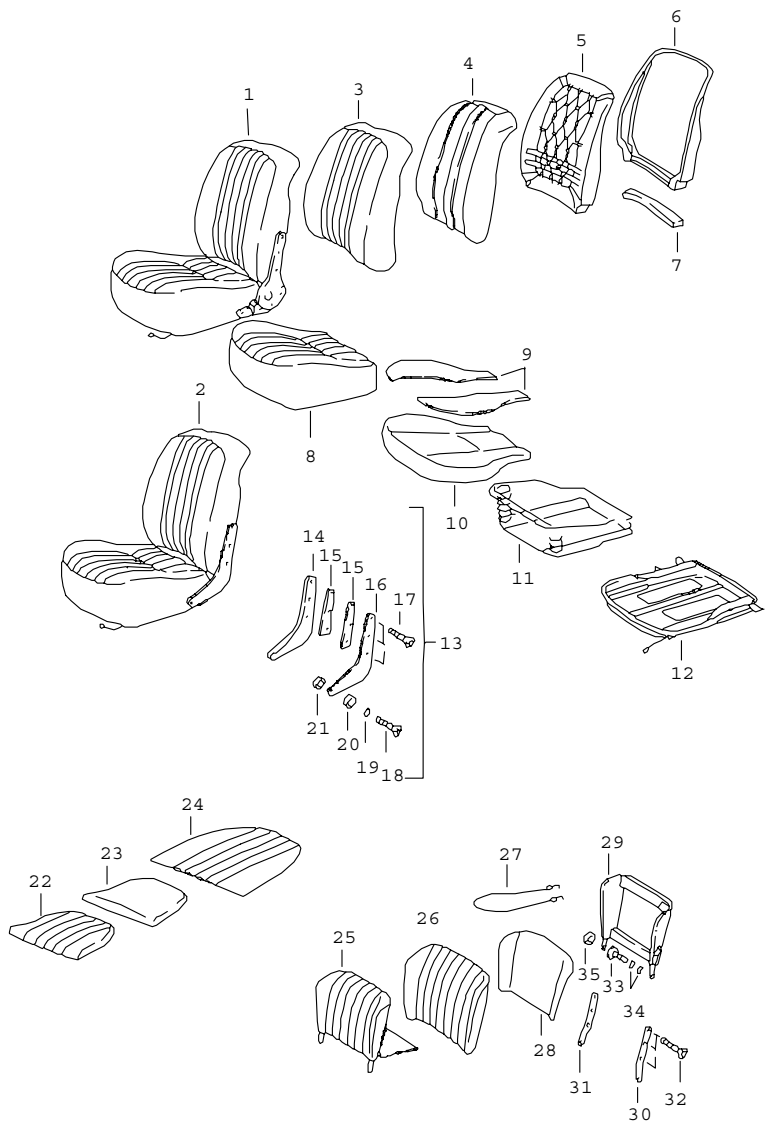

Pos	Part Number	Name	Remarks	Qty	Model
		front seat and back seat - CARRERA 2 - only back seat			
1	E 644 521 001 01	front seat left leatherette without locking device		1	356 B-T5
(1)	E 644 521 002 01	front seat right leatherette without locking device		1	356 B-T5
(1)	E 644 521 001 03	front seat left leatherette with locking device		1	356 B-T6
(1)	E 644 521 002 06	front seat right leatherette with locking device		1	356 B-T6
1	E 644 521 001 06	front seat left leatherette with locking device	/RL	1	356 B-T6
(1)	E 644 521 002 03	front seat right leatherette without locking device	/RL	1	356 B-T6
(1)	E 644 521 001 14	front seat left leather without locking device please state the colour	/LL	1	356 B-T6 356 C
(1)	E 644 521 002 14	front seat right leather with locking device please state the colour	/LL	1	356 B-T6 356 C
(1)	E 644 521 001 24	front seat left leather with locking device please state the colour	/RL	1	356 B-T6 356 C

Pos	Part Number	Name	Remarks	Qty	Model
(1)	E 644 521 002 24	front seat right leather without locking device please state the colour	/RL	1	356 B-T6 356 C
1	E 644 521 001 07	front seat left leatherette without locking device please state the colour	/LL	1	356 C
(1)	E 644 521 002 07	front seat right leatherette with locking device please state the colour	/LL	1	356 C
(1)	E 644 521 001 08	front seat left leatherette with locking device please state the colour	/RL	1	356 C
(1)	E 644 521 002 08	front seat right leatherette without locking device please state the colour	/RL	1	356 C
2	E 644 521 001 42	front seat left leatherette with mounting component		1	356 B-T5 ROADSTER
(2)	E 644 521 002 42	front seat right leatherette with mounting component		1	356 B-T5 ROADSTER
2	E 644 521 001 46	front seat left leatherette with mounting component		1	356 B-T6 ROADSTER
(2)	E 644 521 002 46	front seat right leatherette with mounting component		1	356 B-T6 ROADSTER
3	644 521 525 00	backrest cover		2	356 B-T5
3	644 521 525 06	backrest cover		2	356 B-T6
(3)	644 521 521 14	backrest cover leather please state the colour		2	356 B-T6 356 C
3	644 521 525 07	backrest cover please state the colour		2	356 C: CARRERA 2000 COUPE -REUTTER-
4	E 644 521 505 42	filler piece		2	
5	E 644 521 045 01	support frame		2	
6	E 644 521 021 02	frame		2	
7	E 644 521 215 01	padding		2	
8	E 644 521 521 00	seat cover please state the colour		2	356 B-T5
8	E 644 521 521 06	seat cover please state the colour		2	356 B-T6 356 C
(8)	E 644 521 525 14	seat cover leather please state the colour		2	356 B-T6 356 C
8	644 521 521 08	seat cover please state the colour		2	356 C: CARRERA COUPE -REUTTER-
9	E 644 521 515 00	base	/L	2	
(9)	E 644 521 516 00	base	/R	2	
10	E 644 521 501 42	filler piece		2	
11	E 644 521 041 01	inner spring		2	356 B
11	644 521 041 08	inner spring		2	356 C
12	E 644 521 011 01	frame		2	356 B-T5
12	644 521 009 06	frame	/L	1	356 B-T6 356 C
(12)	E 644 521 010 06	frame	/R	1	356 B-T6 356 C
13	E 644 521 071 42	reclining seat fitting complete		2	ROADSTER
14	E 644 521 074 42	hinge		2	ROADSTER
15	E 644 521 791 00	desk pad		8	ROADSTER
16	E 644 521 073 42	hinge		2	ROADSTER

Pos	Part Number	Name	Remarks	Qty	Model
17	E 900 148 015 02	oval-head screw A M 6 X 20		12	ROADSTER
18	900 148 014 02	countersunk-head screw A M 6 X 15		4	ROADSTER
19	E 900 114 008 00	shake-proof washer		4	ROADSTER
20	E 644 521 741 00	washer		4	ROADSTER
21	E 644 521 783 00	spacer		4	ROADSTER
22	E 644 522 051 05	seat cushion	/L	1	
(22)	E 644 522 052 05	seat cushion	/R	1	
22	644 522 051 30	seat cushion	/L	1	356 B-T6 356 C COUPE -KARMANN-
(22)	644 522 052 30	seat cushion	/R	1	356 B-T6 356 C COUPE -KARMANN-
23	E 644 522 521 05	seat cushion	/L	1	
(23)	E 644 522 522 05	seat cushion	/R	1	
24	E 644 522 057 05	cover for cushion	/L	1	
(24)	E 644 522 058 05	cover for cushion	/R	1	
24	644 522 057 30	cover for cushion	/L	1	COUPE -KARMANN-
(24)	644 522 058 30	cover for cushion	/R	1	COUPE -KARMANN-
25	E 644 522 005 05	back seat backrest	/L	1	356 B COUPE -REUTTER-
(25)	E 644 522 006 05	back seat backrest	/R	1	356 B COUPE -REUTTER-
(25)	E 644 522 005 25	back seat backrest	/L	1	356 B CABRIO
(25)	E 644 522 006 25	back seat backrest	/R	1	356 B CABRIO
25	E 644 522 005 07	back seat backrest please state the colour	/L	1	356 C COUPE CARRERA
(25)	E 644 522 006 07	back seat backrest please state the colour	/R	1	356 C COUPE CARRERA
(25)	E 644 522 005 27	back seat backrest please state the colour	/L	1	356 C CABRIO HARDTOP CARRERA
(25)	E 644 522 006 27	back seat backrest please state the colour	/R	1	356 C CABRIO HARDTOP CARRERA
26	E 644 522 055 05	cover please state the colour	/L	1	356 B
(26)	E 644 522 056 05	cover please state the colour	/R	1	356 B
(26)	E 644 522 055 07	cover please state the colour	/L	1	356 C
(26)	E 644 522 056 07	cover please state the colour	/R	1	356 C
27	E 644 802 152 41	tension rope		1	356 C
28	E 644 522 505 05	seat cushion	/L	1	
(28)	E 644 522 506 05	seat cushion	/R	1	
29	E 644 522 021 05	frame	/L	1	356 B
(29)	E 644 522 022 05	frame	/R	1	356 B
29	E 644 522 021 07	frame	/L	1	356 C
(29)	E 644 522 022 07	frame	/R	1	356 C
30	E 644 522 351 05	hinge half for frame left	/L	1	
(30)	E 644 522 352 05	hinge half for frame right	/R	1	
31	E 644 522 353 05	hinge half for frame right or for frame left	/L /R	2	

Pos	Part Number	Name	Remarks	Qty	Model	Pos	Part Number	Name	Remarks	Qty	Model
32	E 900 024 002 00	countersunk-head screw 4,5 X 18		12	356 B						
(32)	E 900 024 011 00	countersunk-head screw 4,5 X 15		8	356 C						
(32)	E 900 013 026 00	countersunk-head screw 5 X 25		4	356 C						
33	E 644 025 121 00	screw		2							
34	900 028 012 00	spring washer		4							
35	E 644 025 606 00	rubber washer		2							
		- -- E N D -- -									

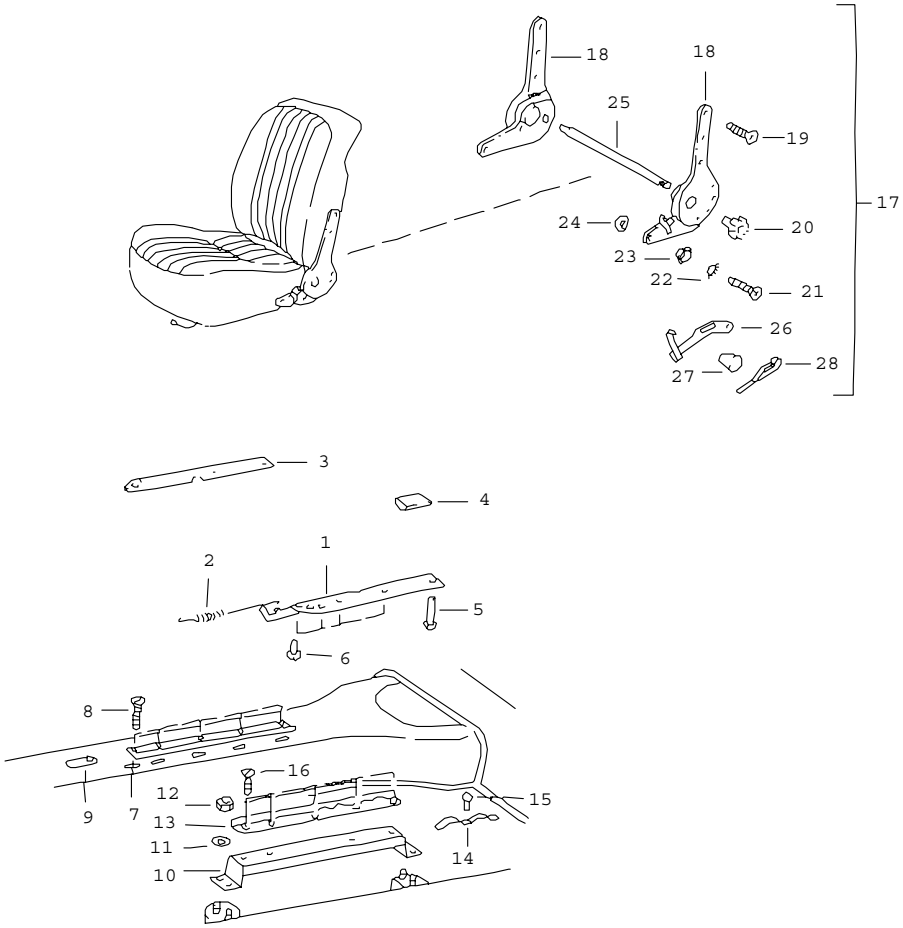

Pos	Part Number	Name	Remarks	Qty	Model
		seat rail seat rail support and reclining seat fitting			356 B-T5
1	E 644 521 033 01	seat rail seat left	/L	1	
(1)	E 644 521 034 01	seat rail seat right	/R	1	
2	E 644 521 333 00	tension spring		2	
(3)	E 644 521 313 01	seat rail seat right	/L	1	
3	E 644 521 314 01	seat rail seat left	/R	1	
4	644 521 191 01	rubber support		4	
5	900 058 002 00	rivet 5 X 18		4	
6	E 900 058 001 00	rivet 5 X 8		16	
7	E 644 521 036 00	seat rail seat left inner	/R	1	
(7)	E 644 521 035 00	seat rail seat right inner	/L	1	
8	E 900 013 008 02	countersunk-head screw		10	
9	E 644 501 643 00	plate		2	
10	E 644 521 017 00	seat rail support	/L	1	
(10)	E 644 521 018 00	seat rail support	/R	1	
11	900 025 007 02	washer 8,4		8	
12	E 900 045 001 00	hexagon nut M 8		8	

Pos	Part Number	Name	Remarks	Qty	Model
13	E 644 521 031 00	seat rail seat left outer	/L	1	
(13)	E 644 521 032 00	seat rail seat right outer	/R	1	
14	E 644 521 321 00	leaf spring		8	
15	E 900 055 009 00	rivet		8	
16	E 900 013 007 02	countersunk-head screw		10	
17	E 644 521 071 05	reclining seat fitting complete	/L	1	
(17)	E 644 521 072 05	reclining seat fitting complete	/R	1	
18	E 644 521 073 05	reclining seat fitting	/L	1	
(18)	E 644 521 074 05	reclining seat fitting	/R	1	
19	E 900 148 015 02	countersunk-head screw		6	
20	E 644 521 711 05	pinion		4	
21	900 148 014 02	countersunk-head screw 6 X 15		4	
22	E 900 114 008 00	shake-proof washer V 6,4		4	
23	E 644 521 741 00	washer		4	
24	E 644 521 783 05	spacer		4	
25	E 644 521 731 05	connecting rod		2	
26	644 521 075 05	lever	/L	1	
(26)	644 521 076 05	lever	/R	1	
27	E 644 521 715 00	knob		2	
28	E 644 521 717 05	leaf spring		2	
		- -- E N D -- -			

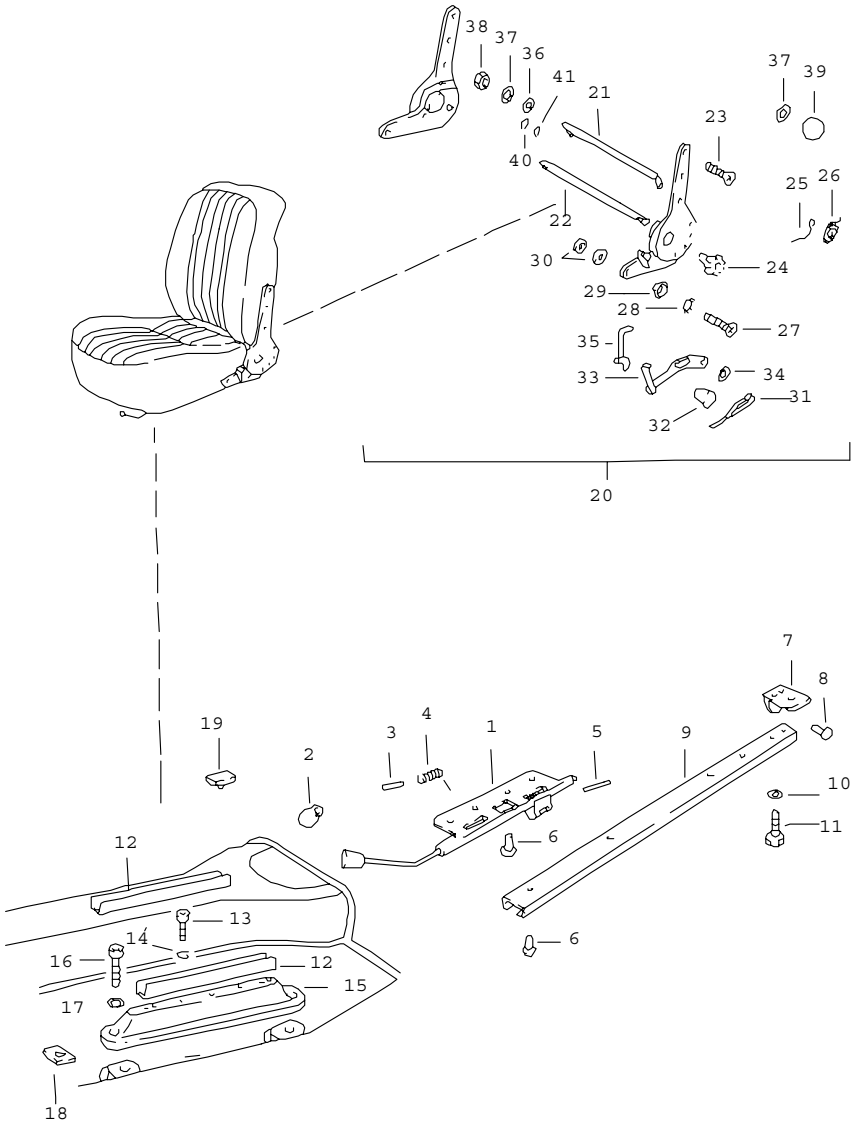

Pos	Part Number	Name	Remarks	Qty	Model
		seat rail and reclining seat fitting			356 B-T6 356 C
1	E 644 521 037 06	locking segment seat left		1	
(1)	E 644 521 038 06	locking segment seat right		1	
2	644 521 371 06	knob		2	
3	E 900 095 028 00	roll pin 2,5 X 12		2	
4	E 644 521 333 06	spring	/L	1	
(4)	E 644 521 334 06	spring	/R	1	
5	900 185 001 00	grooved pin 2,5 X 18		4	
6	E 900 058 001 00	rivet 5 X 8		16	
7	E 644 521 117 06	bracket		4	
8	E 900 058 003 00	rivet 5 X 15		4	
9	E 644 521 303 06	rail		4	
10	900 027 014 01	lock ring B 6		8	
11	E 900 075 015 01	hexagon-head bolt M 6 X 20		8	
12	E 644 521 301 06	guide rail		4	
13	N 014 761 2	pan-head screw M 6 X 12		28	
14	N 012 026 3	lock ring 6		28	
15	E 644 521 017 06	seat rail support	/L	1	
(15)	E 644 521 018 06	seat rail support	/R	1	
16	E 900 067 025 02	screw M 10 X 40		4	
17	900 028 005 01	spring washer A 10		4	

Pos	Part Number	Name	Remarks	Qty	Model
18	E 644 521 327 06	plate		X	
19	644 521 191 01	rubber support		4	
20	E 644 521 071 06	reclining seat fitting complete with locking device	/RL/L	1	
(20)	E 644 521 071 03	reclining seat fitting complete without locking device	/LL/L	1	
(20)	E 644 521 072 06	reclining seat fitting complete with locking device	/LL/R	1	
(20)	E 644 521 072 03	reclining seat fitting complete without locking device	/RL/R	1	
21	E 644 521 079 06	connecting tube		2	
22	E 644 521 731 05	connecting rod		2	
23	E 900 148 015 02	countersunk-head screw		6	
24	E 644 521 711 05	pinion		4	
25	E 644 521 725 00	spring		4	
26	E 644 521 727 00	spring 9 MM		4	
27	900 148 014 02	countersunk-head screw AM 6 X 15		4	
28	E 900 114 008 00	shake-proof washer		4	
29	E 644 521 741 00	washer		4	
30	E 644 521 783 05	spacer		8	
31	E 644 521 717 06	spring		2	
32	E 644 521 715 00	knob		2	
33	644 521 075 05	lever	/L	1	
(33)	644 521 076 05	lever	/R	1	
34	900 025 008 02	washer 10,5		2	
35	E 644 521 723 00	latch	/L	1	
(35)	E 644 521 724 00	latch	/R	1	
36	E 900 031 001 40	washer 8,4		2	
37	900 151 003 02	washer 6,4		4	
38	900 070 002 02	cap nut M 6		2	
39	E 644 521 715 00	knob for locking device		2	
40	N 012 416 1	circlip 16 X 1		4	
41	900 041 004 01	circlip 10 X 1		12	

- -- E N D -- -

Model	Year	MG	SG	Illustration	Restrictions	Update	13:21	27.10.2005	PORSCHE PET PORSCHE
356	65	8	08	808-15		194			

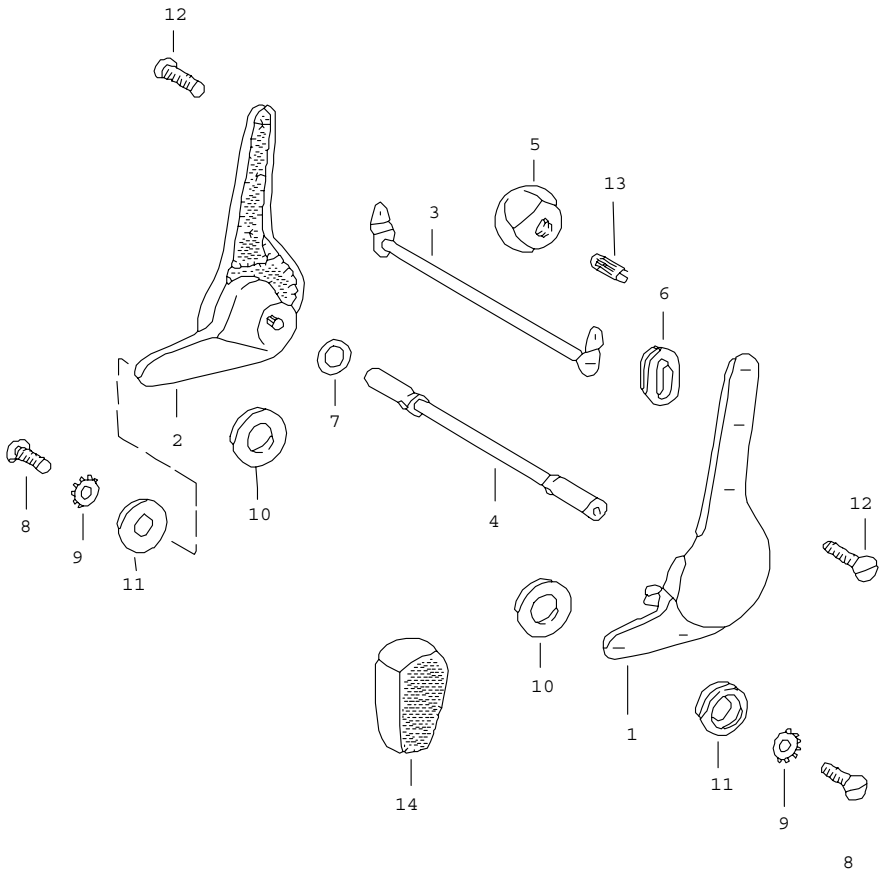

Pos	Part Number	Name	Remarks	Qty	Model
		reclining seat fitting valid from: 1.7.1964			356 C
-	E 644 521 071 07	reclining seat fitting complete left seat comprising: NR.1-3,5+13	/LL	1	
-	E 644 521 072 07	reclining seat fitting complete right seat comprising: NR.1-6,13+14	/LL	1	
-	E 644 521 071 08	reclining seat fitting complete left seat comprising: NR.1-6,13+14	/RR	1	
-	E 644 521 072 08	reclining seat fitting complete right seat comprising: NR.1-3,5+13	/RR	1	
1	901 521 071 21	reclining seat fitting left seat	/LL/L	1	
(1)	901 521 073 22	reclining seat fitting right seat	/LL/L	1	
(1)	901 521 075 21	reclining seat fitting left seat	/RL/L	1	
(1)	E 901 521 077 21	reclining seat fitting right seat	/RL/L	1	
2	901 521 072 21	reclining seat fitting left seat	/LL/R	1	
(2)	901 521 074 21	reclining seat fitting right seat	/LL/R	1	
(2)	901 521 076 21	reclining seat fitting left seat	/RL/R	1	
(2)	E 901 521 078 21	reclining seat fitting right seat	/RL/R	1	
3	E 644 521 079 07	connecting tube		2	
4	E 644 521 080 07	pipe		1	
5	644 521 371 07	knob		2	

Pos	Part Number	Name	Remarks	Qty	Model	Pos	Part Number	Name	Remarks	Qty	Model
6	E 644 521 372 07	rubber sleeve		2							
7	E 900 031 011 40	washer 6,4		2							
8	900 148 014 02	countersunk-head screw AM 6 X 15		4							
9	900 114 008 01	shake-proof washer V 6,4		4							
10	E 644 521 783 05	spacer		4							
11	E 644 521 741 00	washer		4							
12	911 521 103 01	screw		12							
13	E 901 521 911 00	spacer		2							
14	E 901 521 707 21	handle knob		2							
		- -- E N D -- -									

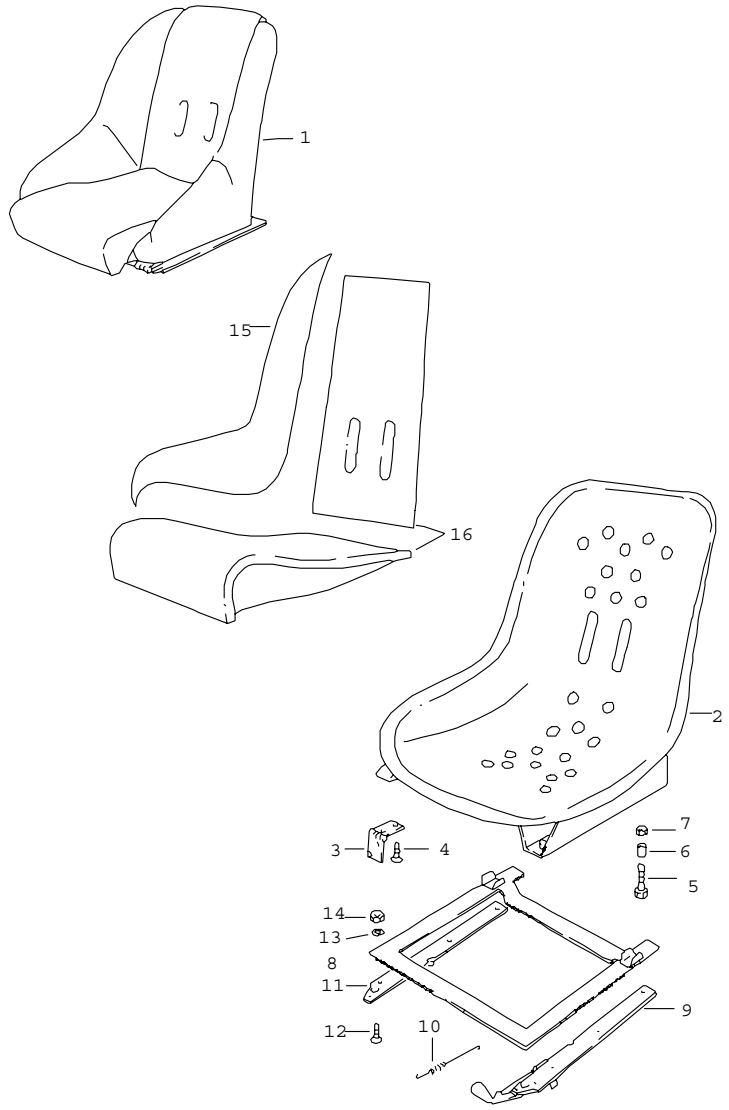

Pos	Part Number	Name	Remarks	Qty	Model
		bucket seat			CARRERA GT
-	E 644 521 001 56	bucket seat	/L	1	CARRERA 2000
-	E 644 521 002 56	bucket seat	/R	1	CARRERA 2000
(1)	E 644 521 001 55	bucket seat	/L	1	CARRERA 1600 692/3/3A
1	E 644 521 002 55	bucket seat	/R	1	CARRERA 1600 692/3/3A
-	E 644 521 061 67	cup for seat		2	CARRERA 2000
2	E 644 521 061 50	cup for seat		2	CARRERA 1600
3	E 644 521 352 40	hinge	/R	2	CARRERA 1600
(3)	E 644 521 351 40	hinge	/L	2	CARRERA 1600
4	E 900 017 003 01	countersunk-head screw AM 6 X 15		8	CARRERA 1600
5	E 644 025 615 00	rubber profile		4	CARRERA 1600
6	N 010 247 7	hexagon-head bolt M 8 X 35		4	CARRERA 1600
7	E -	hexagon nut M 8 DIN 439-4D		4	CARRERA 1600
8	E 644 521 011 42	seat frame		2	CARRERA 1600
9	644 521 033 41	guide rail seat left	/L	1	CARRERA 1600
(9)	644 521 034 41	guide rail seat right	/R	1	CARRERA 1600
10	E 644 521 333 00	tension spring		2	CARRERA 1600
11	644 521 314 41	guide rail seat left	/R	1	CARRERA 1600
(11)	E 644 521 313 41	guide rail seat right	/L	1	CARRERA 1600
12	900 017 004 02	countersunk-head screw AM 6 X 20		8	CARRERA 1600

Pos	Part Number	Name	Remarks	Qty	Model
13	N 012 007 2	lock ring A 6		8	CARRERA 1600
14	900 076 010 02	hexagon nut M 6		8	CARRERA 1600
(15)	E 644 521 503 40	filler piece	/L	2	CARRERA 1600
15	E 644 521 504 40	filler piece	/R	2	CARRERA 1600
16	E 644 521 051 57	padding		2	CARRERA 1600
-	E 644 521 531 40	seat cover carpet rear wall		2	CARRERA 1600
-	E 644 521 533 40	seat cover carpet lateral left		2	CARRERA 1600
-	E 644 521 534 40	seat cover carpet lateral right		2	CARRERA 1600
		- -- E N D -- -			

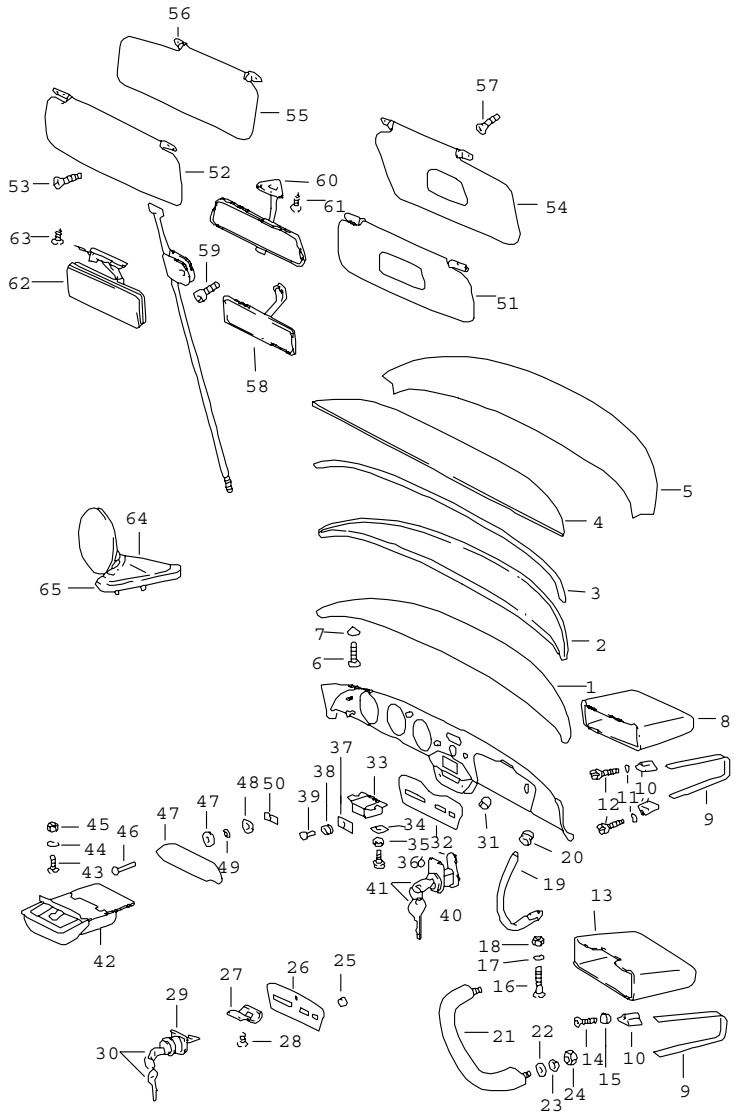

Pos	Part Number	Name	Remarks	Qty	Model
		dashboard accessories			COUPE -REUTTER- CABRIO HARDTOP
1	E 644 552 031 00	padded strip complete please state the colour		1	356 B-T5 COUPE -REUTTER- CABRIO HARDTOP
1	E 644 552 031 26	padded strip complete please state the colour		1	356 B-T6 356 C CABRIO HARDTOP
(1)	E 644 552 031 16	padded strip leatherette black		1	356 B-T6 COUPE -REUTTER- CARRERA 2000 GT
1	E 644 552 031 07	padded strip complete please state the colour		1	356 C COUPE -REUTTER- CARRERA 2000
(1)	E 644 552 031 27	padded strip complete please state the colour		1	356 C CABRIO HARDTOP CARRERA 2000
2	E 644 552 033 00	profile strip steel		1	356 B-T5 COUPE -REUTTER- CABRIO HARDTOP
2	E 644 552 033 26	padded strip steel		1	356 B-T6 356 C CABRIO HARDTOP
(2)	E 644 552 033 16	padded strip aluminium		1	356 B-T6: COUPE -REUTTER- CARRERA 2000 GT
2	E 644 552 033 07	padded strip steel		1	356 C: COUPE -REUTTER- CARRERA 2000 GT

Pos	Part Number	Name	Remarks	Qty	Model
3	E 644 552 321 00	profile		1	356 B: COUPE -REUTTER- 356 B-T5 CABRIO HARDTOP
3	E 644 552 321 26	seat cushion		1	356 B-T6 CABRIO HARDTOP
3	644 552 321 01	seat cushion		1	356 C: COUPE -REUTTER- CABRIO HARDTOP
4	E 644 552 345 00	moltoprene shim		1	
5	644 552 351 00	covering leatherette		1	356 B : 356 C: COUPE -REUTTER- 356 B-T5: CABRIO HARDTOP
5	644 552 351 26	covering leatherette		1	356 B-T6 356 C CABRIO HARDTOP
6	900 143 004 02	oval-head sheetmetal screw B 3,5 X 19		4	356 B-T5
6	900 144 003 02	counters. head tapp. screw B 4,2 X 19		6	356 B-T6
6	900 145 006 02	rais. counters. h. tap. s. B 3,5 X 19		4	356 C
7	999 591 008 12	washer GHE 32 651		4	356 B-T5
7	E 999 591 011 12	washer GHE 32 653 V		6	356 B-T6
7	999 591 009 12	washer GHE 32 651 V		4	356 C
8	644 552 501 01	glove compartment		1	356 B
9	E 644 552 531 00	restraining strap		1	
10	E 644 552 057 00	tensioning sleeve		2	
11	900 028 002 01	spring washer A 5		2	356 B
12	900 014 006 02	pan-head screw AM 5 X 30		2	356 B
13	644 552 501 01	glove compartment		1	356 C
14	900 014 006 02	pan-head screw AM 5 X 30		2	356 C
15	E 644 552 593 00	washer		2	356 C
16	E 900 019 003 02	countersunk-head screw AM 4 X 15		3	
17	900 027 011 01	lock ring A 4		3	
18	N 011 004 6	hexagon nut M 4		3	
19	E 644 552 865 00	handle		1	
20	999 702 119 50	rubber sleeve		1	
21	E 644 552 865 01	handle	/RL	1	
22	N 011 524 7	washer 6,4	/RL	2	
23	900 028 008 01	spring washer B 6	/RL	2	
24	900 076 010 02	hexagon nut M 6	/RL	2	
25	644 025 631 00	rubber stopper		4	356 B
26	E 644 552 037 00	padding		1	356 B
27	E 644 552 552 04	filler plate		1	356 B
28	E 900 018 001 02	countersunk-head screw		2	356 B
29	644 552 550 05	glove compartment lock with keys		1	356 B
30	E 644 613 901 21	key state lock number		2	356 B
-	E 644 613 901 11	blank key		1	356 B
31	E 999 703 035 50	plug		2 1	356 C 356 C CARRERA 2000
32	E 644 552 037 01	cover		1	356 C
33	E 644 552 571 00	magnet		1	356 C

Pos	Part Number	Name	Remarks	Qty	Model
34	E 644 552 575 00	fastening clip		2	356 C
35	E 900 031 006 40	washer 5,3		2	356 C
36	900 119 011 02	pan-head screw M 5 X 10		2	356 C
37	644 552 573 00	plate		1	356 C
38	E 644 552 579 00	rubber washer		1	356 C
39	E 644 731 101 07	interior mirror		1	356 C
40	E 644 552 550 06	glove compartment lock with keys		1	356 C
41	E 644 552 901 00	key state lock number		2	356 C
-	E 644 552 901 10	blank key		1	356 C
42	E 644 552 061 01	ashtray		1	
43	E 900 018 001 02	countersunk-head screw AM 4 X 6		2	
44	900 027 011 01	lock ring A 4		2	
45	900 076 003 00	hexagon nut M 4		2	
46	E 900 055 004 12	rivet 3 X 15		2	
47	644 552 431 00	cover for radio		1	
	700	SCHWARZ			
48	E 644 025 661 00	washer		2	
49	E 644 025 601 00	rubber washer		2	
50	999 507 212 01	nut		2	
51	644 731 301 01	sun visor		1	356 B-T5: COUPE -REUTTER- 356 B/C CABRIO HARDTOP
52	644 731 301 00	sun visor		1	356 B-T5: COUPE -REUTTER- 356 B/C CABRIO HARDTOP
-	E 644 731 331 00	support for sun visor		4	356 B-T5: COUPE 356 B/C CABRIO HARDTOP
53	900 145 003 02	rais. counters. h. tap. s. B 3,5 X 9,5		8	356 B: COUPE -REUTTER- 356 B/C CABRIO HARDTOP
54	644 731 301 06	sun visor		1	356 B-T6 356 C COUPE -REUTTER- COUPE -KARMANN-
(54)	E 644 731 302 07	sun visor	/RL	1	356 B-T6 356 C
55	644 731 301 06	sun visor		1	356 B-T6 356 C COUPE -REUTTER- COUPE -KARMANN-
(55)	E 644 731 301 07	sun visor	/RL	1	356 B-T6 356 C
56	E 644 731 331 41	support		2	356 B-T6 356 C COUPE -REUTTER- COUPE -KARMANN-
57	N 014 093 3	tapping screw B 4,2 X 13		4	356 B-T6 356 C COUPE -REUTTER- COUPE -KARMANN-
(57)	900 145 003 02	rais. counters. h. tap. s. B 3,5 X 9,5	/RL	4	356 B-T6 356 C

Pos	Part Number	Name	Remarks	Qty	Model
58	E 644 731 101 01	interior mirror		1	356 B-T5: COUPE -REUTTER- 356 B/C CABRIO HARDTOP
59	900 067 008 02	hexagon socket head bolt M 6 X 12		1	356 B-T5: COUPE -REUTTER- 356 B/C CABRIO HARDTOP
60	E 644 731 101 06	interior mirror		1	356 B-T6 356 C COUPE -REUTTER- COUPE -KARMANN-
60	E 644 731 101 07	interior mirror		1	356 C: COUPE -REUTTER- CARRERA 2000
61	E 900 144 002 02	counters. head tapp. screw B 3,9 X 13		3	356 B-T6 356 C COUPE -REUTTER- COUPE -KARMANN-
61	E 900 145 023 02	rais. counters. h. tap. s. B 3,9 X 13		3	356 C: COUPE -REUTTER- CARRERA 2000
62	E 644 731 101 26	interior mirror		1	356 C CABRIO HARDTOP CARRERA 200
63	E 900 148 009 02	counters. head tapp. screw AM 5 X 10		2 1	356 C CABRIO HARDTOP 356 C CARRERA 2000
-	E 718 731 121 60	mirror housing - SPYDER -		1	
-	644 731 111 10	door mirror		1	356 B
-	E 644 731 129 05	desk pad		1	356 B
-	900 151 013 02	washer A 6,4		2	356 B
-	900 075 009 01	hexagon-head bolt M 6 X 10		2	356 B
64	644 731 111 10	door mirror		1	356 C
65	E 644 731 129 10	desk pad		1	356 C
		- -- E N D -- -			

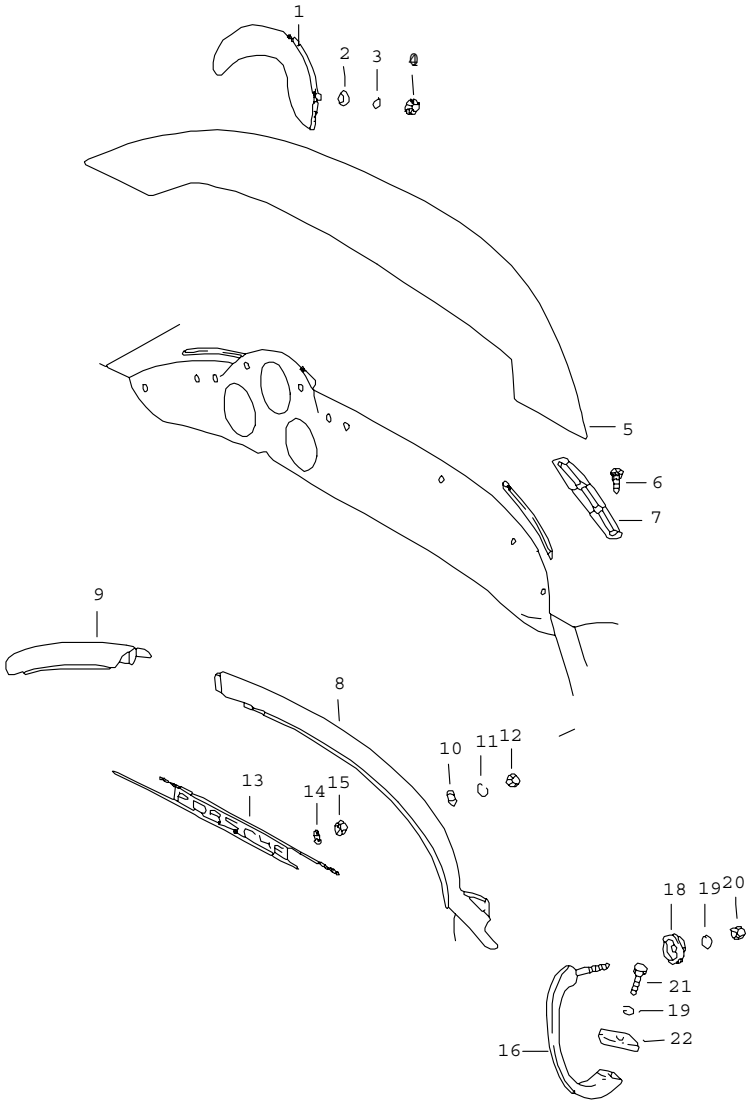

Pos	Part Number	Name	Remarks	Qty	Model
		dashboard accessories			ROADSTER
1	E 644 552 035 41	covering for instruments	/LL	1	
(1)	E 644 552 036 41	covering for instruments	/RL	1	
2	900 151 027 02	washer A 5,3		4	
3	900 027 003 02	lock ring A 5		4	
4	900 076 006 02	hexagon nut M 5		4	
5	644 552 355 41	covering leatherette		1	
6	E 644 552 411 45	rail		2	
7	900 145 002 02	rais. counters. h. tap. s. B 2,9 X 9,5		12	
8	E 644 552 032 41	profile strip complete long		1	
9	E 644 552 032 41	profile strip complete short		1	
10	900 151 027 02	washer A 5,3		6	
11	900 027 011 01	lock ring B 4		6	
12	N 011 004 6	hexagon nut M 4		6	
13	644 559 305 40	logo		1	
14	E 900 028 017 01	spring washer A 3		4	
15	900 076 001 02	hexagon nut M 3		4	
16	E PCG 552 865 40	handle		1	
18	E 644 552 867 40	rose		1	
19	900 027 014 01	lock ring B 6		2	
20	E 900 077 002 02	hexagon nut M 6		1	

Pos	Part Number	Name	Remarks	Qty	Model	Pos	Part Number	Name	Remarks	Qty	Model
21	N 010 210 13	hexagon-head bolt M 6 X 10		1							
22	644 531 632 00	rubber plate		1							
		- -- E N D -- -									

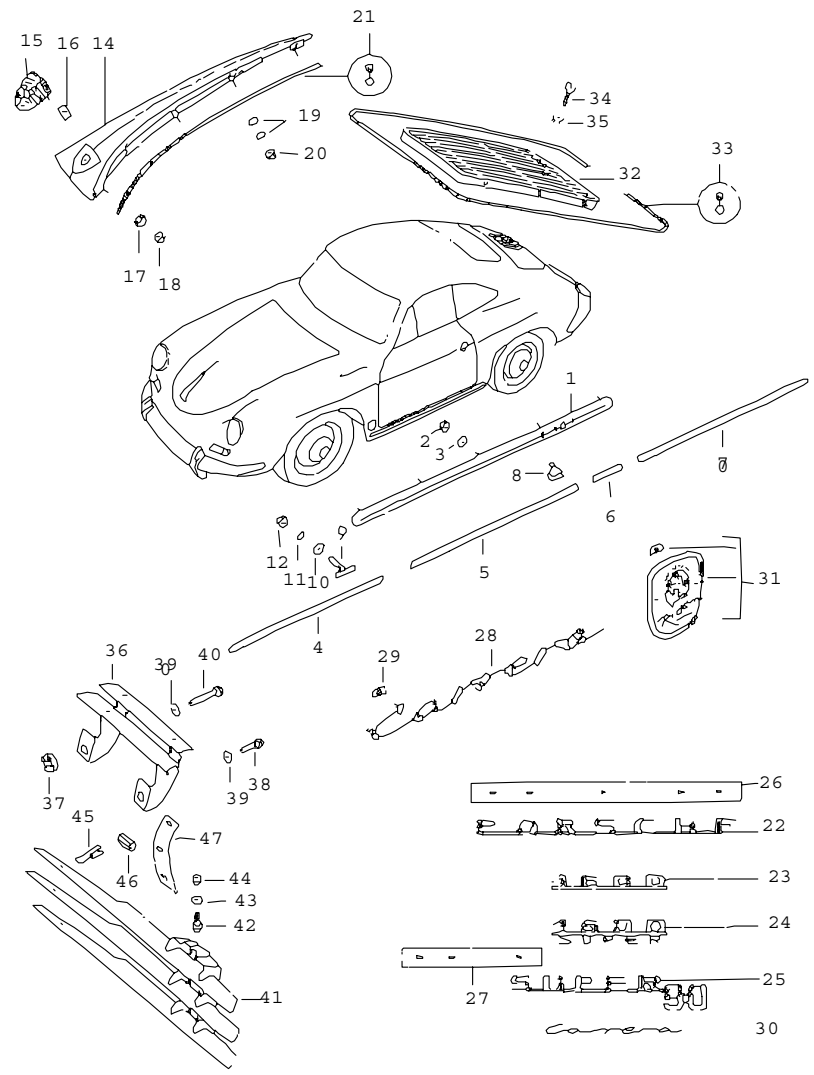

Pos	Part Number	Name	Remarks	Qty	Model
		decorative fittings			
1	PCG 559 011 07	moulding door lower		2	
-	E 999 591 304 02	t-headed screw moulding		10	
2	900 076 010 02	hexagon nut M 6		10	
3	N 011 524 7	washer 6,4		10	
-	E PCG 559 001 00	moulding set comprising: POS.4,5,6,7		1	
4	E 644 559 121 40	moulding wing	/V/L	1	M
(4)	E 644 559 122 40	moulding wing	/V/R	1	M
5	644 559 123 40	moulding door	/V/L	1	M
(5)	644 559 124 40	moulding door	/V/R	1	M
6	E 644 559 125 40	moulding door	/H/L	1	M
(6)	644 559 126 40	moulding door	/H/R	1	M
7	644 559 127 40	moulding wing	/H/L	1	M
(7)	644 559 128 40	moulding wing	/H/R	1	M
8	999 591 302 02	moulding clip		36	COUPE -REUTTER- CABRIO HARDTOP
8	999 591 302 02	moulding clip		32	ROADSTER
(8)	644 559 171 41	moulding clip		4	ROADSTER
9	644 559 171 41	moulding clip		2	COUPE -REUTTER- CABRIO HARDTOP

Pos	Part Number	Name	Remarks	Qty	Model
10	900 025 002 02	washer 4,3		2	COUPE -REUTTER- CABRIO HARDTOP
10	900 025 002 02	washer 4,3		4	ROADSTER
11	N 012 224 3	spring washer A 3		2	COUPE -REUTTER- CABRIO HARDTOP
11	N 012 224 3	spring washer A 4		4	ROADSTER
12	N 011 004 6	hexagon nut M 4		2	COUPE -REUTTER- CABRIO HARDTOP
12	N 011 004 6	hexagon nut M 4		4	ROADSTER
14	644 559 021 05	handle	/V	1	
15	644 559 210 00	emblem		1	
16	999 507 212 01	nut $ 3 MM		1	
17	E 644 025 603 00	rubber washer		2	COUPE -REUTTER- CABRIO HARDTOP
17	E 644 025 603 00	rubber washer		3	ROADSTER
18	900 076 006 02	hexagon nut M 5		2	
19	E 644 025 604 00	washer		6	COUPE CABRIO HARDTOP
19	E 644 025 604 00	washer		2	ROADSTER
20	900 076 002 02	hexagon nut M 4		3	
21	644 559 231 05	desk pad tread 450 MM		1	

Pos	Part Number	Name	Remarks	Qty	Model
-	--- --- --- --	logo - PORSCHE - for dashboard see group 8/09/15		X	ROADSTER
22	644 559 301 05	logo - PORSCHE - body	/H	1	356 B-T5
23	644 559 311 00	logo - 1600 - gold-plated		1	356 B-T5
24	644 559 311 01	logo - 1600 SUPER - gold-plated		1	356 B-T5
25	644 559 311 05	logo - SUPER 90 - gold-plated		1	356 B-T5
26	E 644 559 331 05	speed nut		1	356 B-T5
27	E 644 559 332 00	speed nut		1	356 B-T5
28	644 559 325 00	logo - CARRERA - gold-plated wing front		2	356 B-T5
29	999 591 211 01	speed nut $ 2 MM		8	356 B-T5
30	644 559 326 00	logo - CARRERA - gold-plated body	/H	1	356 B-T5
31	--- --- --- --	not available		X	
32	E 644 559 041 00	ventilation grille		1	356 B-T5: COUPE -REUTTER-
(32)	E 644 559 041 20	ventilation grille		1	356 B-T5: CABRIO HARDTOP ROADSTER
33	644 025 913 00	tread 1130 MM		1	356 B-T5
34	E 900 015 002 00	oval-head screw AM 4 X 8		4	356 B-T5

Pos	Part Number	Name	Remarks	Qty	Model
35	N 011 004 6	hexagon nut M 4		4	356 B-T5
36	644 559 045 05	grille horn	/L	1	
(36)	644 559 046 05	grille horn	/R	1	
37	644 559 453 05	rubber washer		2	
38	N 010 225 4	hexagon-head bolt M 5 X 8		2	
39	900 151 027 02	washer A 5,3		4	
40	900 075 097 02	hexagon-head bolt M 5 X 15		2	
41	644 559 047 05	grille fog headlamp	/L	1	
(41)	E 644 559 048 05	grille fog headlamp	/R	1	
42	900 075 010 02	hexagon-head bolt M 6 X 12		2	
43	900 151 006 09	washer B 6,4		2	COUPE -REUTTER- CABRIO HARDTOP
43	900 151 006 09	washer B 6,4		4	ROADSTER
44	900 076 010 02	hexagon nut M 6		2	
45	644 559 451 05	fastening clip		6	
46	644 559 449 05	intermediate layer		6	
47	E 644 559 447 05	desk pad		2	
		- -- E N D -- -			

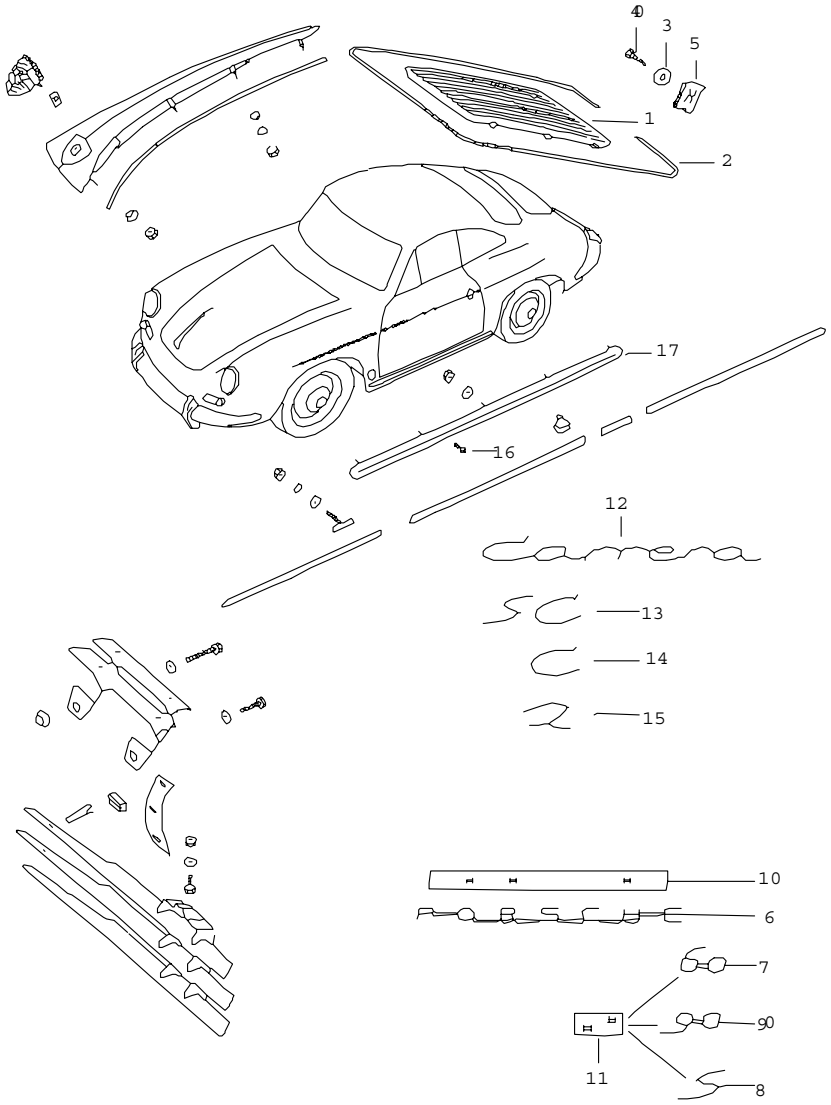

Pos	Part Number	Name	Remarks	Qty	Model
		decorative fittings parts not listed see group 8/10/00			356 B-T6 356 C
1	644 559 041 06	ventilation grille		2	COUPE -REUTTER-
(1)	E 644 559 041 26	ventilation grille		2	CABRIO HARDTOP ROADSTER COUPE -KARMANN-
2	644 025 913 00	tread		2	
3	900 151 001 02	washer A 4,3		8	
4	900 187 001 02	hexagon-head tapping screw BZ 4,2 X 13		8	
5	999 507 001 02	speed nut		8	
6	644 559 301 06	logo - PORSCHE - body	/H	1	
7	644 559 304 06	logo - 60 - body	/H	1	
8	644 559 302 06	logo - S - body	/H	1	
9	644 559 303 06	logo - 90 - body	/H	1	
10	E 644 559 332 00	speed nut		1	
11	E 644 559 333 06	speed nut		1	
12	644 559 325 00	logo - CARRERA - body		1	
-	E 644 559 334 06	speed nut for - CARRERA -		1	
13	644 559 303 07	logo - SC - body		1	

Pos	Part Number	Name	Remarks	Qty	Model	Pos	Part Number	Name	Remarks	Qty	Model
14	644 559 302 07	logo - C - body		1							
15	644 559 306 06	logo - 2 -		1							
-	E 644 559 333 06	speed nut for - SC -/- C -/- 2 -		1							
16	E 999 591 304 02	t-headed screw		10							
17	PCG 559 011 07	moulding door lower		2							
		- -- E N D -- -									

Model	Year	MG	SG	Illustration	Restrictions	Update	13:22	27.10.2005	PORSCHE PET PORSCHE
356	65	8	11	811-00		194			

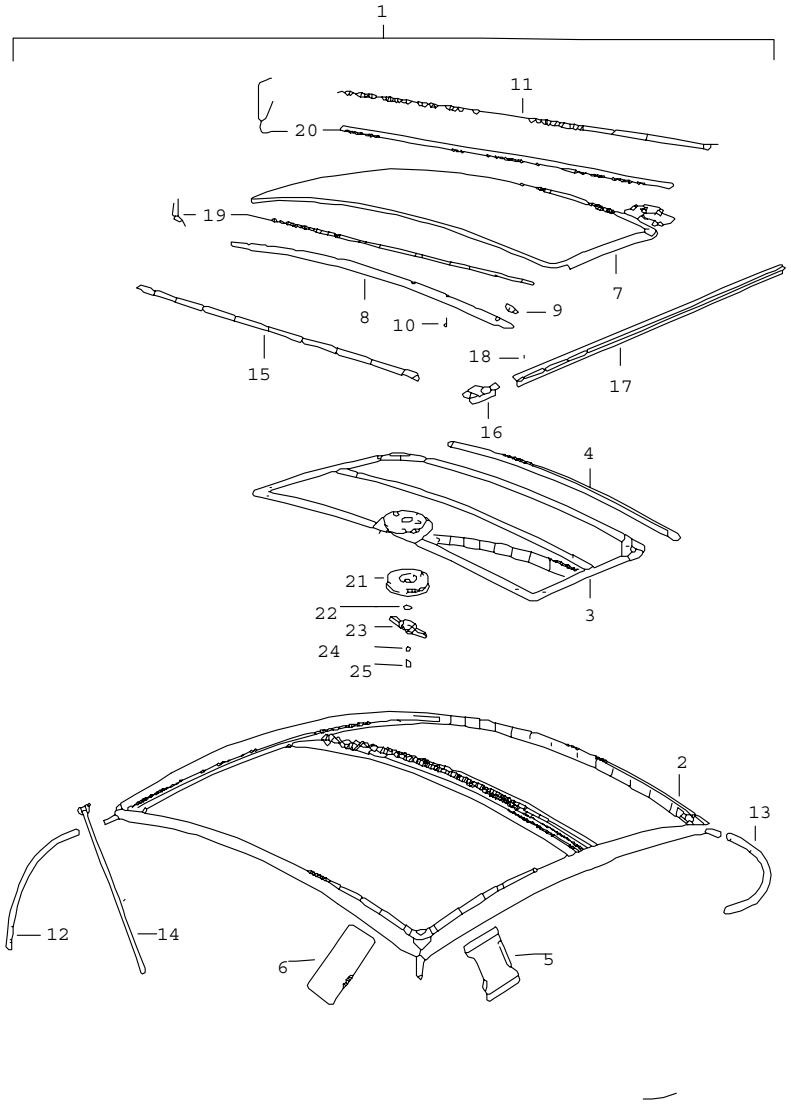

Pos	Part Number	Name	Remarks	Qty	Model
		sunroof mechanical			COUPE -REUTTER-
1	E 644 564 051 00	sunroof mechanical complete with roof lining		1	
2	E 644 503 053 00	frame complete		1	
3	E 644 564 083 00	roof frame complete		1	
4	E 644 503 823 00	reinforcement roof frame		2	
5	E 644 503 553 50	bracket lateral		6	
6	E 644 503 551 50	bracket front		2	
7	E 644 564 053 00	cover		1	
8	E 644 564 541 00	sealing rail		1	
9	E 644 564 543 50	retaining bracket		6	
10	E 900 138 002 02	pan-head tapping screw B 2,9 X 9,5 chrome		10	
11	E 644 503 521 00	rail reinforcement		1	
12	E 999 181 201 40	water drain hose	/V	*	
13	E 999 181 202 40	water drain hose	/H	*	
14	E 644 564 925 50	hose clamp		4	
15	E 644 564 591 00	rail		1	
16	E 644 564 513 00	end piece	/L	1	
(16)	E 644 564 514 00	end piece	/R	1	
17	E 644 564 511 00	guide rail	/L	1	
(17)	E 644 564 512 00	guide rail	/R	1	
18	900 145 009 02	tapping screw cross-recess screw B 3,9 X 9,5 chrome		20	

Pos	Part Number	Name	Remarks	Qty	Model	Pos	Part Number	Name	Remarks	Qty	Model
19	901 564 905 05	sealing rubber	/V	1							
20	901 564 905 05	sealing rubber	/H	1							
21	E 644 564 841 00	finger plate		1							
22	N 012 225 2	spring washer B 5		1							
23	E 644 564 831 00	grip		1							
24	900 115 001 01	serrated lock washer A 5,3		1							
25	E 644 564 851 00	nut for grip		1							
-	E 644 555 501 00	roof lining		1							
-	E 644 564 081 50	cover for cover sunroof		1							
		- -- E N D -- -									

Model	Year	MG	SG	Illustration	Restrictions	Update	13:23	27.10.2005	PORSCHE	PET	PORSCHE
356	65	8	11	811-05		194					

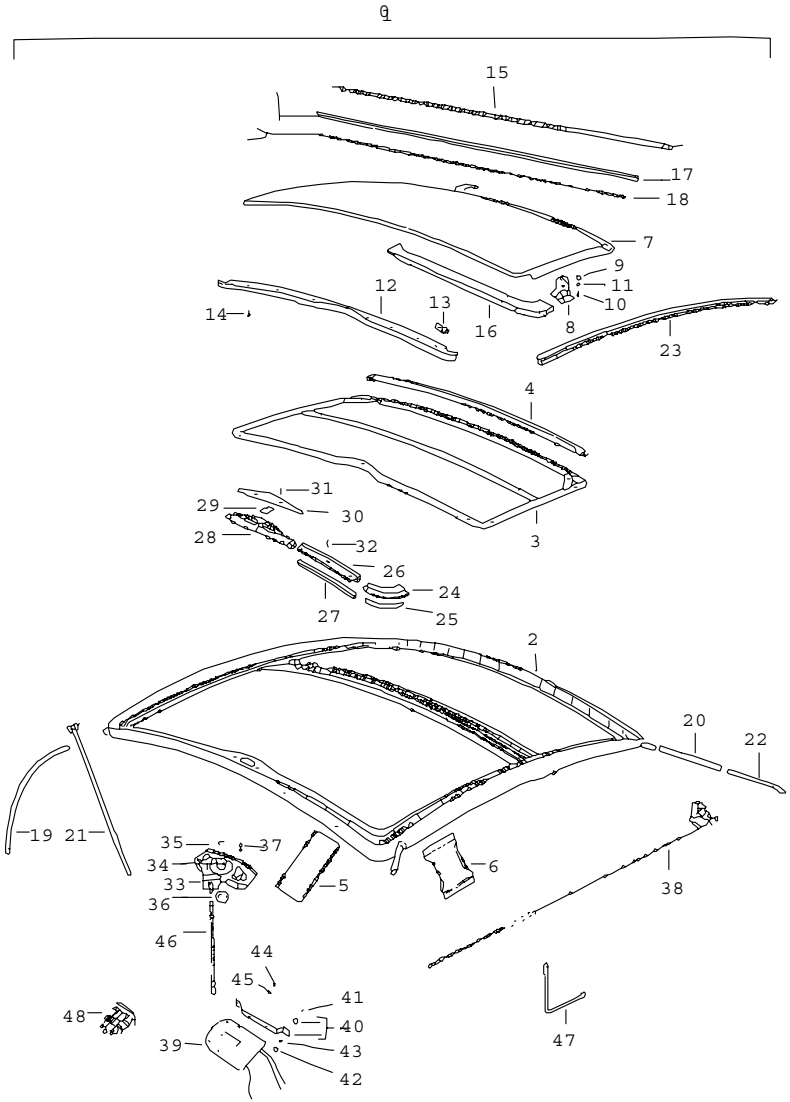

Pos	Part Number	Name	Remarks	Qty	Model
		sunroof electric			
1	E 644 564 051 50	sunroof complete		1	COUPE -REUTTER-
(1)	E 644 564 051 60	sunroof complete		1	CABRIO HARDTOP
(1)	644 564 051 30	sunroof complete		1	COUPE -KARMANN-
2	E 644 503 053 50	frame complete		1	COUPE -REUTTER-
(2)	E 644 563 013 60	frame complete		1	CABRIO HARDTOP
(2)	644 563 013 30	frame complete		1	COUPE -KARMANN
3	E 644 564 083 50	roof frame complete		1	
4	E 644 564 823 50	reinforcement roof frame		1	
5	E 644 503 541 06	bracket front		2	
6	E 644 503 551 50	bracket lateral front centre rear		6	COUPE -REUTTER-
(6)	644 563 201 60	bracket lateral		4	CABRIO HARDTOP COUPE -KARMANN-
7	E 644 564 053 50	cover		1	COUPE -REUTTER-
(7)	E 644 564 053 60	cover		1	CABRIO HARDTOP COUPE -KARMANN-
-	E 644 564 081 50	cover cover for sunroof		1	COUPE -REUTTER-
-	E 644 564 081 60	cover cover for sunroof		1	CABRIO HARDTOP COUPE -KARMANN-

Pos	Part Number	Name	Remarks	Qty	Model
8	E 644 564 055 50	guide with slide knurled nut	/L	1	
(8)	E 644 564 056 50	guide with slide knurled nut	/R	1	
9	E 644 564 537 00	knurled nut M 10 X 1		4	
10	E 900 015 014 02	oval-head screw A M 5 X 15		4	
11	900 115 001 00	serrated lock washer A 5,3		4	
12	E 644 564 541 50	sealing rail		1	COUPE -REUTTER-
(12)	E 644 564 541 60	sealing rail		1	CABRIO HARDTOP COUPE -KARMANN-
13	E 644 564 543 50	retaining bracket		7	
14	E 900 138 002 02	pan-head tapping screw		6	
15	E 644 503 521 50	rail reinforcement		1	COUPE -REUTTER-
(15)	E 644 503 521 60	rail reinforcement		1	CABRIO HARDTOP
(15)	644 503 521 30	rail reinforcement		1	COUPE -KARMANN-
16	E 644 564 911 50	rubber plate		1	COUPE -REUTTER-
(16)	E 644 564 912 50	rubber plate		1	CABRIO HARDTOP COUPE -KARMANN-
17	E 644 564 901 50	velvet strip small		1	
(17)	644 564 902 50	velvet strip large		1	
18	901 564 905 05	sealing rubber		1	
19	E 999 181 201 40	water drain hose	/V	*	COUPE -REUTTER- COUPE -KARMANN-
(19)	E 999 181 202 40	water drain hose	/V	*	CABRIO HARDTOP
20	E 999 181 202 40	water drain hose	/H	*	
21	E 644 564 925 50	hose clamp		6 6 8	COUPE -REUTTER- COUPE -KARMANN- CABRIO HARDTOP
22	E 644 503 581 50	water drain tube	/H/L	1	COUPE -REUTTER-
(22)	644 503 582 50	water drain tube	/H/R	1	COUPE -REUTTER-
(22)	E 644 563 327 60	water drain tube	/H/L	1	CABRIO HARDTOP COUPE -KARMANN-
(22)	E 644 563 328 60	water drain tube	/H/R	1	CABRIO HARDTOP COUPE -KARMANN-
23	644 564 511 50	guide rail	/L	1	
(23)	E 644 564 512 50	guide rail	/R	1	
24	E 644 564 513 50	end piece upper part	/L	1	
(24)	E 644 564 514 50	end piece upper part	/R	1	
25	E 644 564 515 50	end piece lower part	/L	1	
(25)	E 644 564 516 50	end piece lower part	/R	1	
26	E 644 564 517 50	connecting piece upper part	/L	1	
(26)	E 644 564 518 50	connecting piece upper part	/R	1	
27	E 644 564 519 50	connecting piece lower part	/L	1	

Pos	Part Number	Name	Remarks	Qty	Model
(27)	E 644 564 520 50	connecting piece lower part	/R	1	
28	E 644 564 651 50	cable cover		1	
29	E 644 564 659 50	spring plate		1	
30	E 644 564 653 50	cover		1	
31	E 900 147 002 02	countersunk-head screw B M 4 X 25 chrome		2	
32	900 145 009 02	tapping screw B 3,9 X 9,5 chrome		21	
33	644 564 601 50	transmission		1	
34	E 644 564 611 50	drive pinion		1	
35	E 900 041 020 01	snap ring 5 X 0,6		1	
36	E 644 564 657 50	cap		1	
37	E 644 564 605 50	screw		2	
38	E 644 564 633 50	cable control part complete	/L	1	
(38)	E 644 564 634 50	cable control part complete	/R	1	
39	E 644 624 015 50	motor 6 V		1	
(39)	644 624 016 50	motor 12 V		1	M
40	644 624 051 50	clip motor with silentbloc		1	
41	E 900 189 001 01	half-round screw A M 6 X 8		2	
42	900 076 010 02	hexagon nut M 6		2	
43	900 028 008 01	spring washer B 6		2	
44	900 075 010 01	hexagon-head bolt M 6 X 12		2	
45	900 028 008 01	spring washer B 6		2	
46	E 644 624 121 51	pliable shaft engine transmission		1	
47	E 644 564 641 50	actuator transmission		1	
48	E 644 613 621 50	rocker switch actuator sunroof		1	

- -- E N D -- -

Model	Year	MG	SG	Illustration	Restrictions	Update			
356	65	8	11	811-10		194	13:23	27.10.2005	PORSCHE PET PORSCHE

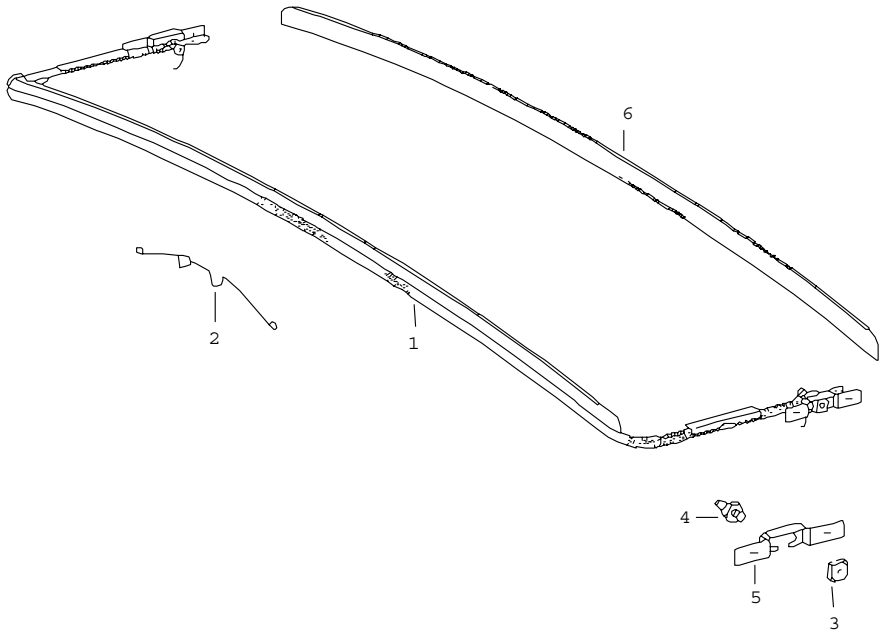

Pos	Part Number	Name	Remarks	Qty	Model
		air deflector sunroof electric			
1	E 644 564 091 00	air deflector complete for subsequent installat.		1	
2	E 644 564 916 00	spring clip		1	
3	900 198 012 00	nut M 5		2	
4	E 644 564 917 00	screw bolt		2	
5	E 644 564 918 00	support bolt		2	
6	644 564 919 00	tread 1000 MM		1	
		- -- E N D -- -			

Model	Year	MG	SG	Illustration	Restrictions	Update	13:23	27.10.2005	PORSCHE PET PORSCHE
356	65	8	11	811-15		194			

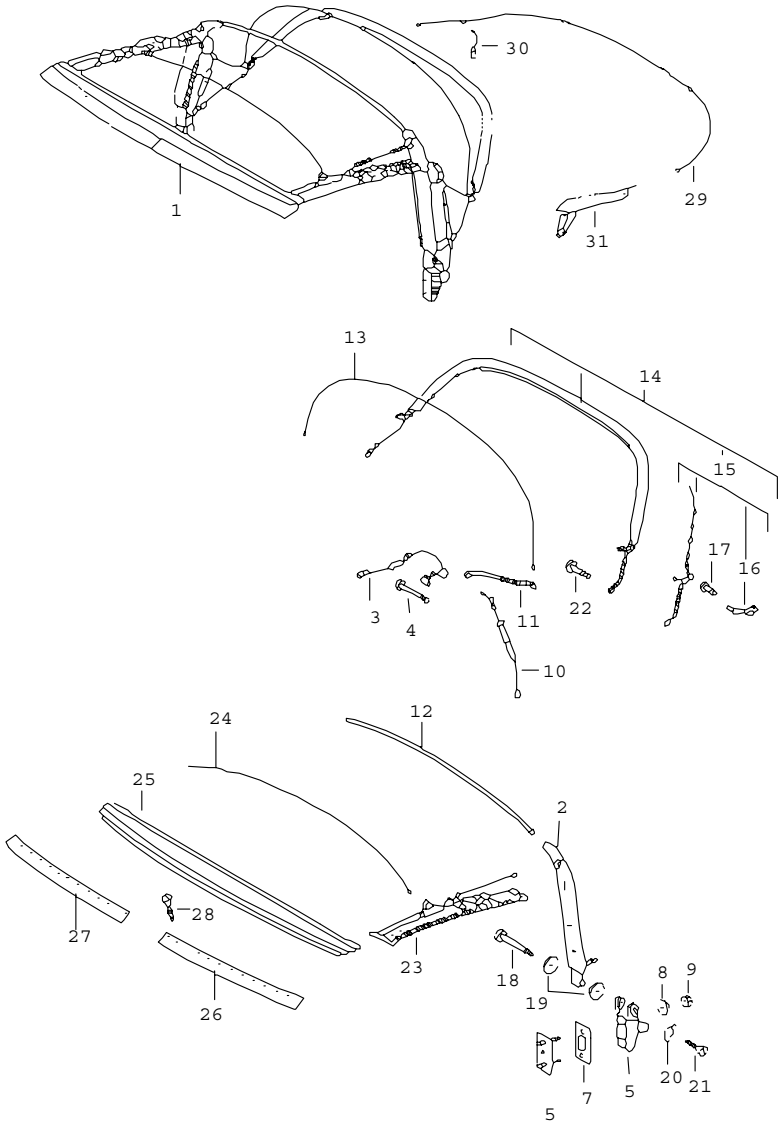

Pos	Part Number	Name	Remarks	Qty	Model
		convertible top frame			CABRIO
1	E 644 561 005 02	convertible top frame		1	
2	E 644 561 053 00	bracket	/L	1	
(2)	E 644 561 054 00	bracket	/R	1	
3	E 644 561 311 01	lever	/L	1	
(3)	E 644 561 312 01	lever	/R	1	
4	E 644 025 122 00	screw		1	
5	E 644 561 071 01	convertible top support	/L	1	
(5)	E 644 561 072 01	convertible top support	/R	1	
6	644 561 710 00	plate		2	
7	E 644 561 791 00	shim 1,5 MM		2	
(7)	E 644 561 791 01	shim 2,0 MM		2	
8	900 025 008 02	washer 10,5		4	
9	E 900 158 004 00	hexagon nut M 10 X 1		4	
10	E 644 561 037 02	lever	/L	1	
(10)	E 644 561 038 02	lever	/R	1	
11	E 644 561 431 00	control arm	/L	1	
(11)	E 644 561 432 00	control arm	/R	1	
12	E 644 561 521 00	bow		1	
13	E 644 561 531 01	bow	/H	1	
14	644 561 055 02	bow	/H	1	
15	E 644 561 411 01	lever	/L	1	
(15)	E 644 561 412 01	lever	/R	1	
16	E 644 561 043 02	control arm	/L	1	
(16)	E 644 561 044 02	control arm	/R	1	
17	E 644 561 419 00	pin		2	
18	644 025 121 01	screw		2	

Pos	Part Number	Name	Remarks	Qty	Model	Pos	Part Number	Name	Remarks	Qty	Model
19	E 644 025 141 00	washer		4							
20	E 644 025 148 00	washer		2							
21	E 900 013 003 02	countersunk-head screw AM 5 X 10		2							
22	E 644 025 121 00	screw		2							
23	E 644 561 031 00	roof frame	/L	1							
(23)	E 644 561 032 00	roof frame	/R	1							
24	E 644 561 511 00	bow	/V	1							
25	644 561 501 00	bow	/V	1							
26	E 644 561 505 00	rail	/L	1							
27	E 644 561 506 00	rail	/R	1							
28	E 900 024 001 00	countersunk-head screw M 3 X 20		24							
29	E 644 561 057 00	clip		1							
30	E 644 561 752 00	support		2							
31	E 644 561 059 00	protective plate prime coated	/L	1							
(31)	E 644 561 060 00	protective plate prime coated	/R	1							
		- -- E N D -- -									

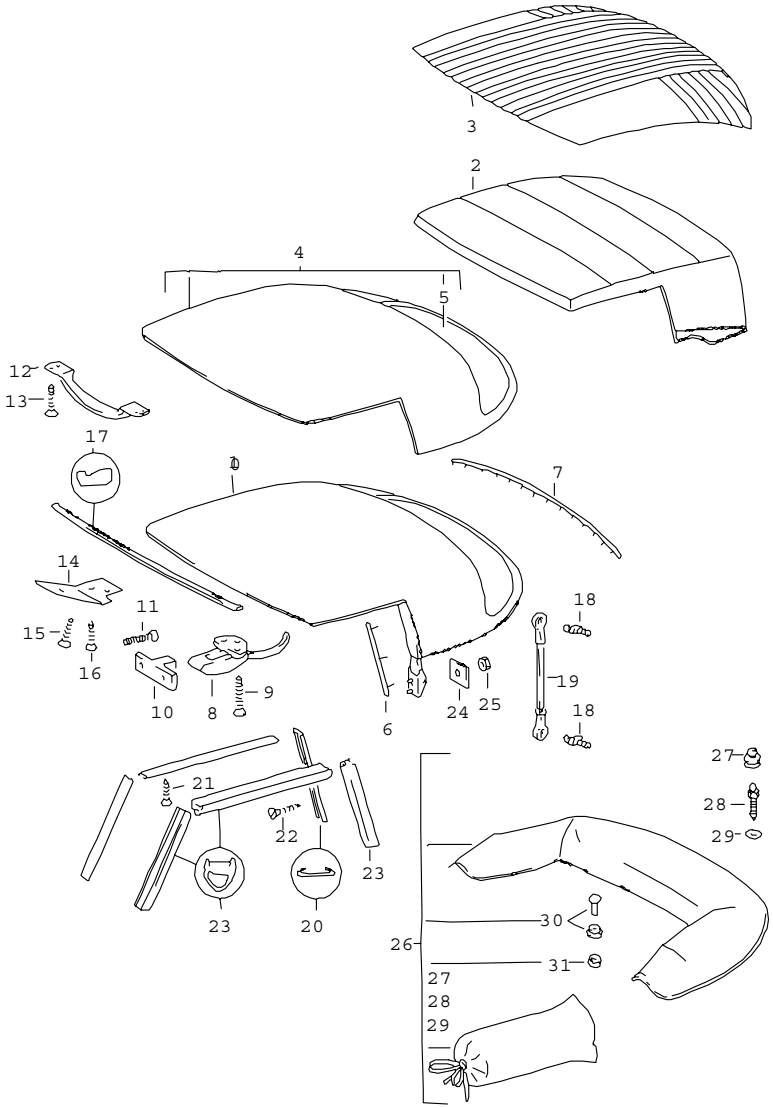

Pos	Part Number	Name	Remarks	Qty	Model
		convertible top and convertible top covering			CABRIO
1	E 644 561 001 01	convertible top complete with cover		1	
2	644 555 501 21	rooflining		1	356 B-T5
-	E 644 555 501 26	rooflining		1	356 B-T6 356 C
3	E 644 561 093 01	heat insulation		1	
4	644 561 082 01	convertible top covering with rear window		1	356 B-T5
-	E 644 561 082 06	convertible top covering with rear window and zip		1	356 B-T6 356 C
5	E 644 545 101 21	rear window		1	356 B-T5
-	A 644 564 907 28	catch for rear window double		1	356 B-T6 356 C
-	644 564 907 28	zip for rear window double		1	356 B-T6 356 C
6	644 561 877 00	moulding		2	
7	E PCG 561 881 00	moulding		1	
8	E 644 561 891 01	catch upper part		3	
8	E 644 561 891 02	catch upper part		3	
9	E 900 150 001 02	countersunk-head screw 4,5 X 25		9	
10	E 644 561 892 00	catch lower part		3	
11	E 900 148 012 02	rais. counters. h. tap. s. M 5 X 15		6	
12	E 644 561 991 00	handle		2	

Pos	Part Number	Name	Remarks	Qty	Model
13	900 149 002 02	countersunk-head screw 3 X 17		8	
14	E 644 561 893 00	cover plate	/L	1	
(14)	E 644 561 894 00	cover plate	/R	1	
15	900 145 002 02	rais. counters. h. tap. s. B 2,9 X 9,5		4	
16	900 139 001 02	counters. head tapp. screw B 2,9 X 9,5		2	
17	644 561 931 20	sealing rubber 1350 MM		1	
18	644 025 741 00	ball pin		4	
19	644 563 081 20	connecting piece		2	
20	644 542 950 20	retaining strip 1150 MM		2	
21	900 139 001 02	counters. head tapp. screw B 2,9 X 9,5		20	
22	E 900 140 004 02	countersunk-head screw B 3,5 X 13		8	
23	644 542 095 20	sealing rubber	/L	1	
(23)	644 542 095 20	sealing rubber	/R	1	
24	E 644 563 792 00	plate		2	
25	E 900 183 001 00	hexagon nut M 12 X 1,5		2	
26	E 644 561 095 01	convertible top cover		1	
27	999 591 601 12	tenax upper part GHE 33		12	
28	E 999 591 602 12	tapping screw GHE 21		12	
29	E 644 025 143 00	washer		10	
30	E 999 591 810 12	push button upper part GHE 30 201		4	
31	999 591 804 12	push button lower part GHE 30 212		4	
		- -- E N D -- -			

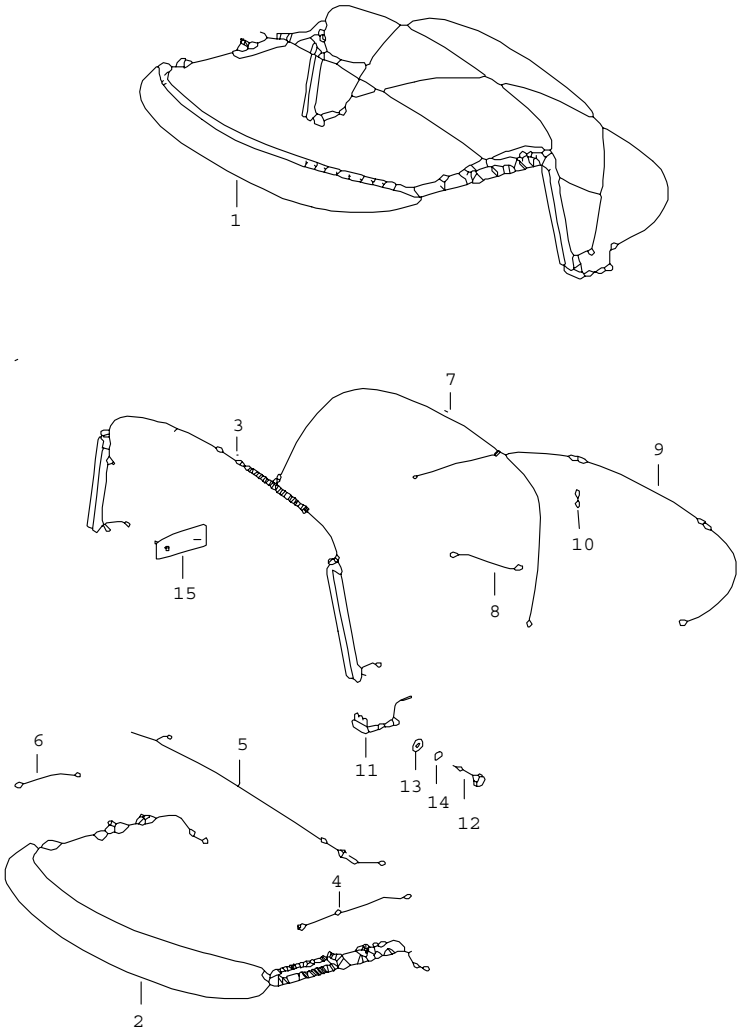

Pos	Part Number	Name	Remarks	Qty	Model
		convertible top frame			ROADSTER
1	644 561 005 41	convertible top frame without cover F 86 831 >> 87 363		1	
(1)	644 561 005 42	convertible top frame without cover F 87 364 >> 87 825		1	
(1)	E 644 561 005 45	convertible top frame without cover F 87 826 >>		1	
-	644 561 001 41	convertible top with cover F 86 831 >> 87 363		1	
-	644 561 001 42	convertible top with cover F 87 364 >> 87 825		1	
-	644 561 001 45	convertible top with cover F 87 826 >>		1	
2	644 561 003 41	roof frame lacquered with cover F 86 831 >> 87 363		1	
(2)	E 644 561 003 42	roof frame lacquered with cover F 87 364 >> 87 825		1	
(2)	E 644 561 003 45	roof frame lacquered with cover F 87 826 >>		1	
3	E 644 561 007 41	bow with cover		1	
4	644 561 245 41	control arm roof frame and main folding top bow		2	

Pos	Part Number	Name	Remarks	Qty	Model
-	N 011 524 2	washer 6,4		2	
-	N 012 226 5	spring washer B 6		4	
-	900 028 005 00	spring washer A 10		2	
5	644 561 008 41	intermed. folding top bow with cover F 86 831 >> 87 363	/V	1	
(5)	E 644 561 008 45	intermed. folding top bow with cover F 87 364 >> 87 825	/V	1	
6	644 561 345 41	control arm roof frame and intermed. folding top bow F 86 831 >> 87 363	/L	1	
(6)	644 561 346 41	control arm roof frame and intermed. folding top bow F 86 831 >> 87 363	/R	1	
7	E 644 561 041 41	bow	/H	1	
-	900 055 015 00	rivet 6 X 15		2	
-	N 011 524 7	washer 6,4		2	
-	900 028 008 00	spring washer B 6		2	
8	644 561 445 41	control arm		2	
-	900 055 015 00	rivet 6 X 15 F 86 831 >> 87 363		2	
-	900 055 016 00	rivet 6 X 18		2	
-	N 011 524 7	washer 6,4		6	
-	900 028 008 00	spring washer B 6 F 86 831 >> 87 363		2	
9	E 644 561 045 41	clip		1	
10	E 644 561 451 41	clip		2	
-	900 075 010 02	hexagon-head bolt M 6 X 12		4	
-	900 114 002 02	shake-proof washer 6,4		4	
11	E 644 561 071 41	convertible top support	/L	1	
(11)	E 644 561 072 41	convertible top support	/R	1	
12	900 075 029 02	hexagon-head bolt M 8 X 25		4	
13	900 025 007 02	washer 8,4		4	
14	900 027 015 02	lock ring A 8		4	
(15)	E 644 561 075 45	cover plate with cover	/L	1	
15	E 644 561 076 45	cover plate with cover	/R	1	
-	E 900 145 012 02	rais. counters. h. tap. s. B 4,2 X 32		4	
-	E 999 591 103 12	washer		2	
		- -- E N D -- -			

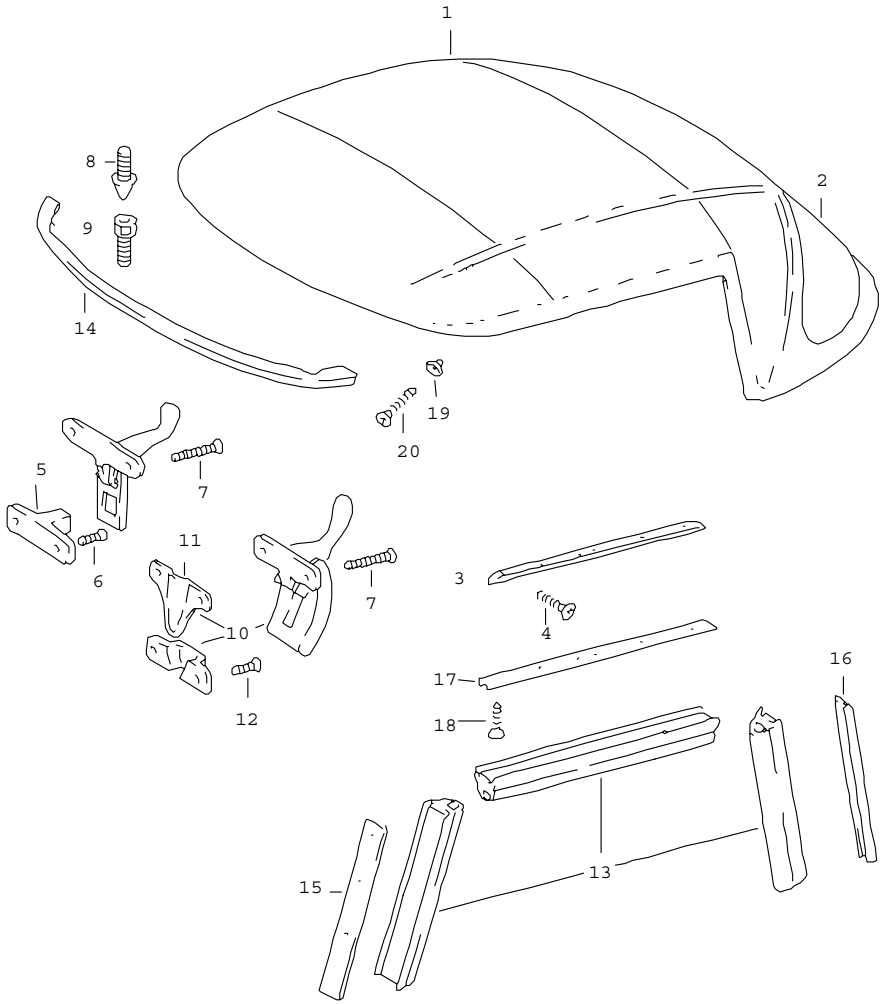

Pos	Part Number	Name	Remarks	Qty	Model
		convertible top accessories			ROADSTER
1	E 644 561 080 41	convertible top covering complete with rear window		1	
2	E 644 561 087 41	convertible top covering with rear window		1	
3	E 644 561 865 41	rain channel light alloy	/V/L	1	
(3)	E 644 561 866 41	rain channel light alloy	/V/R	1	
4	900 145 002 02	rais. counters. h. tap. s. B 2,9 X 9,5		12	
5	540 561 890 00	catch complete F 86 831 >> 87 825		2	
6	E 900 148 008 02	oval-head screw AM 5 X 8 F 86 831 >> 87 825		4	
7	E 999 148 005 04	screw AM 5 X 12		4	
8	E 644 561 897 41	retaining pivot F 86 831 >> 87 825		2	
9	E 644 561 895 41	screw F 86 831 >> 87 825		2	
10	E 644 561 890 45	catch complete F 87 826 >>		2	
11	E 644 561 898 45	guide wedge F 87 826 >>		2	
12	E 900 148 007 02	oval-head screw AM 5 X 6		4	
13	644 542 929 41	gasket door glass frame 1450 MM		2	
14	E 644 541 931 41	rubber moulding F 86 831 >> F >> 87 760		1	
14	E 644 541 931 45	rubber moulding F 87 761 >>		1	

Pos	Part Number	Name	Remarks	Qty	Model
15	E 644 542 951 41	rail	/V/L	1	
(15)	E 644 542 952 41	rail	/V/R	1	
16	E 644 542 957 41	rail	/H/L	1	
(16)	E 644 542 958 41	rail	/H/R	1	
17	E 644 542 956 41	rail		2	
18	900 143 001 02	tapping screw B 2,9 X 6,5		30	
19	E 999 591 102 12	protection washer $ 3,5 MM		2	
20	900 145 004 02	rais. counters. h. tap. s. B 3,5 X 13		2	
-	E 644 561 821 41	beading 60 X 4500 MM complete		1	
-	644 725 060 41	convertible top cover with bag		1	
-	E 644 725 061 41	convertible top cover without bag		1	
-	E 644 725 051 41	tonneau cover		1	M
-	E 644 725 055 41	bag for tonneau cover		1	
		- -- E N D -- -			

Pos	Part Number	Name	Remarks	Qty	Model

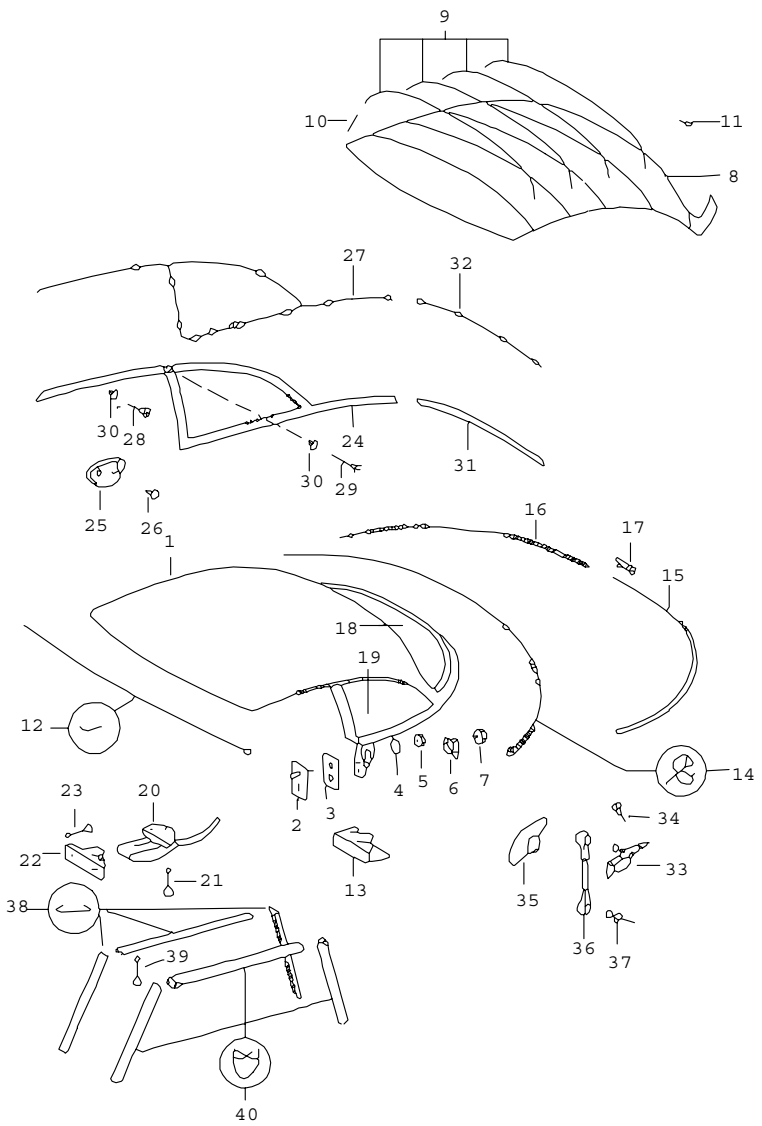

Pos	Part Number	Name	Remarks	Qty	Model
		hardtop			356 B/C
1	E 644 563 005 00	hardtop bodyshell prime coated		1	
(1)	E 644 563 005 30	hardtop with roof frame		1	COUPE -KARMANN-
(1)	644 563 005 35	hardtop with roof frame and sunroof for hardtop - KARMANN - deleted picture (2-7), (12-23), (27) + (31-37) for picture 8-11 see group 8/07/05		1	COUPE -KARMANN-
2	E 644 563 710 00	plate		2	
3	E 644 563 791 00	shim 1,2 MM		2	
(3)	E 644 563 791 01	shim 1,25 MM		2	
4	900 025 008 02	washer 10,5		2	
5	E 900 158 004 00	hexagon nut M 10 X 1		2	
6	E 644 563 792 00	plate		2	
7	E 900 183 001 00	hexagon nut M 12 X 1,5		2	
8	E 644 555 501 60	roof lining leatherette		1	
(8)	E 644 555 501 65	roof lining for sunroof electrically adjustable		1	M

Pos	Part Number	Name	Remarks	Qty	Model
-	E 644 564 907 50	zip for sunroof electrically adjustable		1	CABRIO/ HARDTOP -KARMANN-:M
9	E 644 555 511 60	transverse strut		4	
10	644 555 515 00	rubber profile		8	
11	999 591 321 01	clamp		11	
12	644 561 931 20	sealing rubber 1350 MM		1	
13	E 644 563 907 00	rubber profile	/L	1	
(13)	E 644 563 908 00	rubber profile	/R	1	
14	E 644 563 905 00	rubber moulding		1	
15	E 644 563 915 00	moulding	/L	1	
16	E 644 563 916 00	moulding	/R	1	
17	E 644 563 921 00	covering plate		1	
18	-	see group 8/05/00 picture 40-43			
19	-	see group 8/05/00 picture 26+27			
20	E 644 561 891 01	catch		3	CABRIO HARDTOP
20	E 644 561 891 02	catch upper part sunroof		3	CABRIO HARDTOP
21	E 900 148 012 02	rais. counters. h. tap. s. AM 5 X 15		9	
22	E 644 561 892 00	catch lower part		3	
23	E 900 148 012 02	rais. counters. h. tap. s. AM 5 X 15		6	
(24)	E 644 563 091 30	ornamental strip with cover	/L	1	HARDTOP -KARMANN-
(24)	E 644 563 092 30	ornamental strip with cover	/R	1	HARDTOP -KARMANN-
(24)	E 644 563 091 00	ornamental strip with cover please state the colour	/L	1	356 B-T5
(24)	E 644 563 091 60	ornamental strip with cover please state the colour	/L	1	356 B-T6/C
24	E 644 563 092 00	ornamental strip with cover please state the colour	/R	1	356 B-T5
(24)	E 644 563 092 60	ornamental strip with cover please state the colour	/R	1	356 B-T6/C
25	644 552 871 00	coat hook		2	
25	PCG 552 871 00	coat hook		2	
26	E 900 055 010 30	rivet 4 X 6		4	
(27)	E 644 563 093 00	ornamental strip without cover	/L	1	356 B-T5
(27)	E 644 563 093 60	ornamental strip without cover	/L	1	356 B-T6/C
27	E 644 563 094 00	ornamental strip without cover	/R	1	356 B-T5
(27)	E 644 563 094 60	ornamental strip without cover	/R	1	356 B-T6/C
28	900 145 006 02	rais. counters. h. tap. s. B 3,5 X 19		19	
29	900 145 082 07	tapping screw B 3,5 X 32		8	
30	999 591 008 12	washer GHE 32 651		27	

Pos	Part Number	Name	Remarks	Qty	Model
31	E 644 563 095 00	ornamental strip centre piece with cover		1	
32	E 644 563 981 00	ornamental strip centre piece without cover		1	
33	E 644 563 815 00	angle		2	
34	E 900 019 010 02	rais. counters. h. tap. s. M 6 X 15		4	
35	E 644 563 821 00	cap chrome		2	
36	644 563 081 01	connecting piece		2	
37	644 025 741 00	ball pin		2	
38	644 542 950 20	retaining strip light alloy for gasket door glass frame 1150 MM		2	
39	900 139 001 02	counters. head tapp. screw B 2,9 X 9,5		28	
40	644 542 095 20	sealing rubber	/L	1	
(40)	644 542 095 20	sealing rubber	/R	1	
		- -- E N D -- -			

Pos	Part Number	Name	Remarks	Qty	Model

Model	Year	MG	SG	Illustration	Restrictions	Update		
356	65	8	12	812-00		194	13:25	27.10.2005

Pos	Part Number	Name	Remarks	Qty	Model
		seat belt			
-	E 644 803 123 00	rose		2	
-	E 644 803 125 00	adjusting washer		2	
-	900 147 001 02	countersunk-head screw AM 8 X 30		2	
-	E 644 803 127 00	cover disc		4	
-	E 644 803 141 00	spacer		4	
-	E 644 803 126 00	countersunk-head screw		4	
		seat belt			M
-	E 644 803 901 01	seat belt 1 set lap belt grey black please state the colour comprising:		1	
-	E 644 803 011 01	seat belt lap belt complete grey black please state the colour		1	
-	E 644 803 122 00	bolt		2	
-	E 644 803 128 00	spacer tube		2	
-	E 644 803 901 05	seat belt 1 set left comprising:		X	
-	E 644 803 011 02	seat belt left complete		1	
-	E 644 803 128 00	spacer tube		1	
-	E 644 803 122 00	bolt		1	
-	E 644 803 121 00	bolt		1	
-	900 142 002 01	lock ring 8		1	
-	N 012 024 1	lock ring 12		1	
-	E 900 119 007 02	pan-head screw hexagon socket head bolt M 8 X 45		1	

Model	Year	MG	SG	Illustration	Restrictions	Update		
356	65	8	12	812-00		194	13:25	27.10.2005

Pos	Part Number	Name	Remarks	Qty	Model
-	E 644 803 901 03	seat belt 1 set lap belt seat belt left comprising:		X	
-	E 644 803 011 03	seat belt lap belt seat belt left complete		1	
-	E 644 803 122 00	bolt		2	
-	E 644 803 128 00	spacer tube		2	
-	E 644 803 121 00	bolt		1	
-	900 142 002 01	lock ring 8		1	
-	N 012 024 1	lock ring 12		1	
-	E 900 119 007 02	pan-head screw hexagon socket head bolt M 8 X 45		1	
-	E 644 803 901 02	seat belt 1 set seat belt right comprising:		X	
-	E 644 803 012 02	seat belt seat belt right complete		1	
-	E 644 803 122 00	bolt		1	
-	E 644 803 128 00	spacer tube		1	
-	E 644 803 121 00	bolt		1	
-	900 142 002 01	lock ring 8		1	
-	N 012 024 1	lock ring 12		1	
-	E 900 119 007 02	pan-head screw hexagon socket head bolt M 8 X 45		1	

Model	Year	MG	SG	Illustration	Restrictions	Update		
356	65	8	12	812-00		194	13:25	27.10.2005

Pos	Part Number	Name	Remarks	Qty	Model
-	E 644 803 901 06	seat belt 1 set lap belt seat belt right comprising:		X	
-	E 644 803 012 03	seat belt lap belt seat belt right		1	
-	E 644 803 122 00	bolt		2	
-	E 644 803 128 00	spacer tube		2	
-	E 644 803 121 00	bolt		1	
-	900 142 002 01	lock ring 8		1	
-	N 012 024 1	lock ring 12		1	
-	E 900 119 007 02	pan-head screw hexagon socket head bolt M 8 X 45		1	
		- -- E N D -- -			

Model	Year	MG	SG	Illustration	Restrictions	Update	13:25	27.10.2005	PORSCHE PET PORSCHE
356	65	8	13	813-00		194			

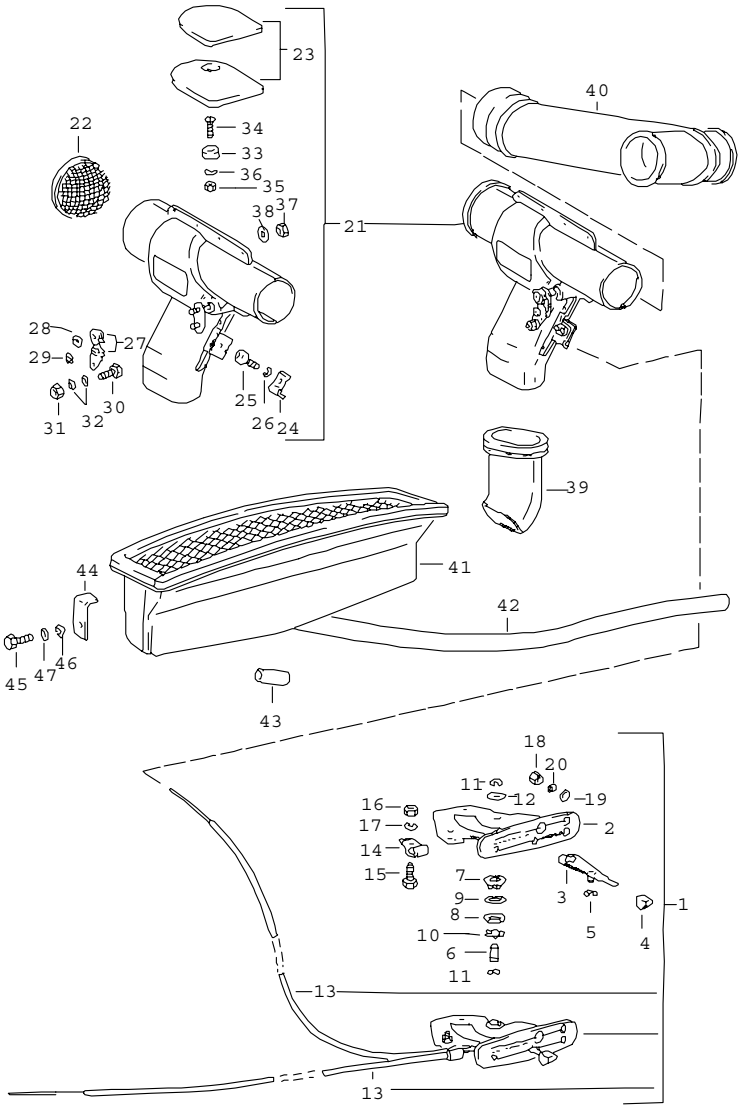

Pos	Part Number	Name	Remarks	Qty	Model
		ventilation			
1	E 644 571 082 06	control switch complete		1	
2	E 644 571 802 06	switch housing		1	
3	E 644 571 085 06	lever		1	
4	E 644 571 811 06	knob black		1	
5	900 116 003 01	lock washer 4		1	
6	E 644 571 812 06	shaft		1	
7	E 644 571 813 06	thrust bearing		1	
8	E 644 571 814 06	washer		1	
9	E 644 571 815 06	washer		1	
10	E 644 571 816 06	thrust washer		1	
11	N 012 435 1	washer 5		2	
12	900 151 003 02	washer A 6,4		1	
13	E 644 571 880 06	bowden cable complete		1	
14	E 644 571 821 06	clamp		1	
15	900 075 005 02	hexagon-head bolt M 5 X 15		1	
16	900 076 004 02	hexagon nut M 5		1	
17	N 012 005 3	lock ring B 5		1	
18	900 076 010 02	hexagon nut M 6		2	
19	N 011 524 7	washer 6,4		2	
20	900 027 014 01	lock ring B 6		2	
(21)	644 572 063 06	flap control box complete	/L	1	

Pos	Part Number	Name	Remarks	Qty	Model
21	E 644 572 064 06	flap control box complete	/R	1	
22	E 644 572 673 06	strainer		2	
23	--- --- --- --	gasket flap distributor not available		X	
24	E 644 572 675 06	clamp		2	
25	900 067 051 02	pan-head screw hexagon socket head bolt M 5 X 10		2	
26	N 012 005 3	lock ring B 5		2	
27	E 644 572 611 06	shake-proof washer in pairs		2	
28	E 900 198 001 02	square nut M 5		2	
29	900 116 003 01	lock washer 4		2	
30	901 211 683 00	clamping screw M 4		2	
31	N 011 004 6	hexagon nut M 4		2	
32	900 025 002 02	washer 4,3		4	
33	E 644 572 685 06	magnet $ 20 MM		2	
(33)	644 572 686 06	magnet $ 15 MM		2	
34	900 013 016 02	countersunk-head screw AM 3 X 12		4	
35	900 076 001 02	hexagon nut AM 3		4	
36	E 900 027 001 01	lock ring A 3		4	
37	900 076 010 02	hexagon nut M 6		2	
38	900 151 003 02	washer A 6,4		X	
(39)	E 644 572 691 06	sleeve rubber flap control box passenger compartment	/L	1	
39	E 644 572 692 06	sleeve rubber flap control box passenger compartment	/R	1	
(40)	E 644 572 693 06	t-piece rubber flap control box heating tube	/L	1	
40	E 644 572 694 06	t-piece rubber flap control box heating tube	/R	1	
41	E 644 571 012 06	fresh air inlet box		1	
42	644 571 921 06	hose		1	
43	E 644 571 923 06	sleeve		1	
44	E 644 571 019 06	retaining bracket		2	
45	N 010 215 13	hexagon-head bolt M 6 X 15		2	
46	N 012 007 2	lock ring A 6		2	
47	N 011 524 7	washer 6,4		2	
		- -- E N D -- -			

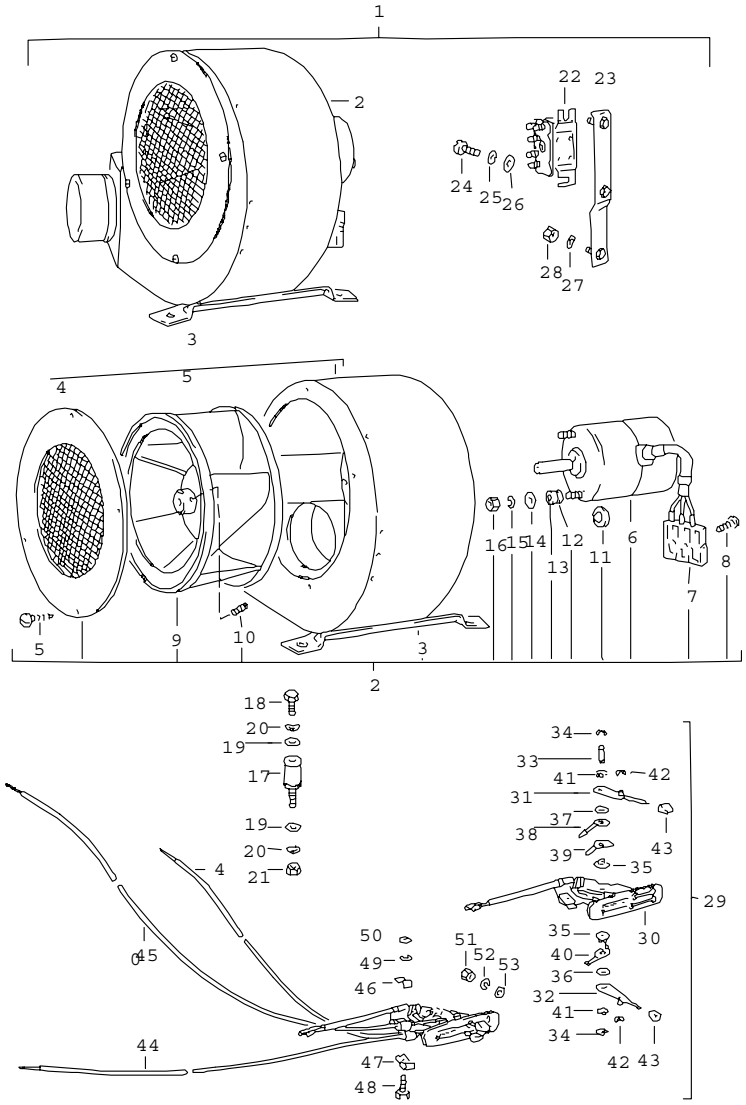

Pos	Part Number	Name	Remarks	Qty	Model
		blower additional blower for subsequent installat.			COUPE -REUTTER- CABRIO HARDTOP CARRERA GT
1	E 644 571 950 06	blower additional blower 6 V complete		1	
(1)	644 571 950 08	blower additional blower 12 V complete		1	
2	E 644 571 501 06	blower 6 V		1	
(2)	E 644 571 502 06	blower 12 V		1	
3	E 644 571 951 06	housing		1	
4	E 644 571 952 06	cover plate		1	
5	900 138 010 02	pan-head tapping screw B 3,5 X 6,5		4	
6	E 644 571 954 06	electric motor 6 V		1	
(6)	E 644 571 954 08	electric motor 12 V		1	
7	E 999 652 143 40	push-on connector 3-pole		1	
8	900 138 023 02	pan-head screw B 2,9 X 13		2	
9	E 644 571 953 06	fan		1	
10	900 228 001 01	threaded pin hexagon socket head bolt AM 5 X 8		1	
11	E 644 571 956 06	rubber cap		2	
12	E 644 571 957 06	rubber sleeve		2	
13	644 571 955 06	spacer tube		2	
14	900 151 027 02	washer A 5,3		2	
15	N 012 005 3	lock ring B 5		2	

Pos	Part Number	Name	Remarks	Qty	Model
16	900 076 004 02	hexagon nut M 5		2	
17	E 644 572 967 00	silentbloc		3	
18	N 010 208 5	hexagon-head bolt M 6 X 8		3	
19	N 011 524 7	washer 6,4		6	
20	900 028 008 01	spring washer B 6		6	
21	900 076 010 02	hexagon nut M 6		3	
-	644 572 971 00	breather hose $ 60 X 1400 MM		2	
22	PCG 615 101 00	relay 6 V		1	
(22)	E 644 615 102 01	relay 12 V		1	
23	E 644 615 015 06	relay holder		1	
24	E 900 014 030 02	pan-head screw AM 5 X 20		1	
25	N 012 225 2	spring washer B 5		1	
26	900 151 027 02	washer A 5,3		1	
27	N 012 225 2	spring washer B 5		2	
28	900 076 004 02	hexagon nut M 5		2	
-	E 644 612 027 00	wiring harness blower		1	
29	E 644 571 083 06	control switch		1	
30	E 644 571 823 06	switch housing		1	
31	E 644 571 086 06	lever heating		1	
32	E 644 571 825 06	lever ventilation		1	
33	E 644 571 817 06	shaft		1	
34	N 012 435 1	washer 5		2	
35	E 644 571 813 06	thrust bearing		2	
36	E 644 571 814 06	washer		1	
37	E 644 571 815 06	washer		1	
38	E 644 571 831 06	contact spring		1	
39	E 644 571 832 06	contact spring		1	
40	E 644 571 833 06	contact spring		1	
41	E 644 571 816 06	thrust washer		2	
42	900 116 003 01	lock washer 4		2	
43	E 644 571 811 06	knob black		2	
44	E 644 571 880 06	bowden cable 705 MM 990 MM		1	
45	E 644 571 883 06	bowden cable 1640 MM		1	
46	644 571 822 06	clamp		1	
47	E 644 571 821 06	clamp		1	
48	900 075 005 02	hexagon-head bolt M 5 X 15		1	
49	N 012 005 3	lock ring B 5		1	
50	E 900 198 001 02	square nut M 5		1	
51	900 076 011 02	hexagon nut M 6		2	
52	900 027 014 01	lock ring B 6		2	
53	N 011 524 7	washer 6,4		2	

- -- E N D -- -

Model	Year	MG	SG	Illustration	Restrictions	Update				
356	65	8	13	813-10		194	13:25	27.10.2005	PORSCHE	PET	PORSCHE

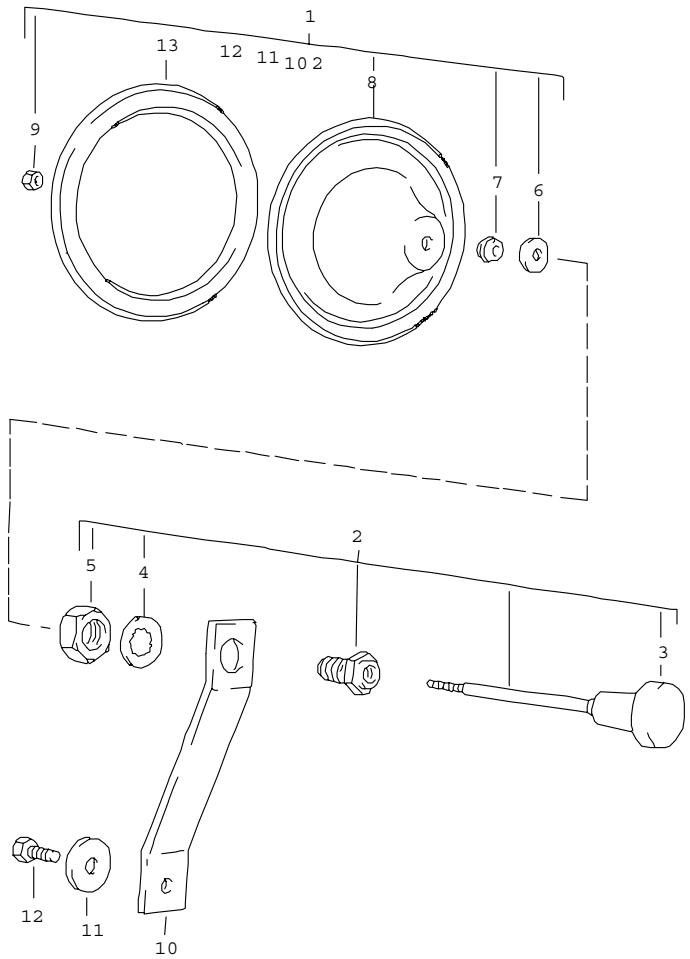

Pos	Part Number	Name	Remarks	Qty	Model
		valve			ROADSTER
1	E 644 571 011 02	valve		2	
2	E 644 571 015 01	knob with axle and clamping piece		2	
3	E 644 552 810 01	knob		2	
4	N 012 112 2	shake-proof washer J 12,5		2	
5	E 900 078 004 00	hexagon nut M 12 X 1,5		2	
6	900 151 028 02	washer A 4,3		4	
7	E 999 702 012 50	rubber sleeve 4 X 8 X 8		2	
8	E 644 571 111 00	seat		2	
9	N 011 004 6	hexagon nut M 4		4	
10	E 644 501 207 00	retaining bracket		2	
11	900 151 003 02	washer		2	
12	900 075 010 02	hexagon-head bolt M 6 X 12		2	
13	E 644 571 191 00	rubber ring		2	
		- -- E N D -- -			

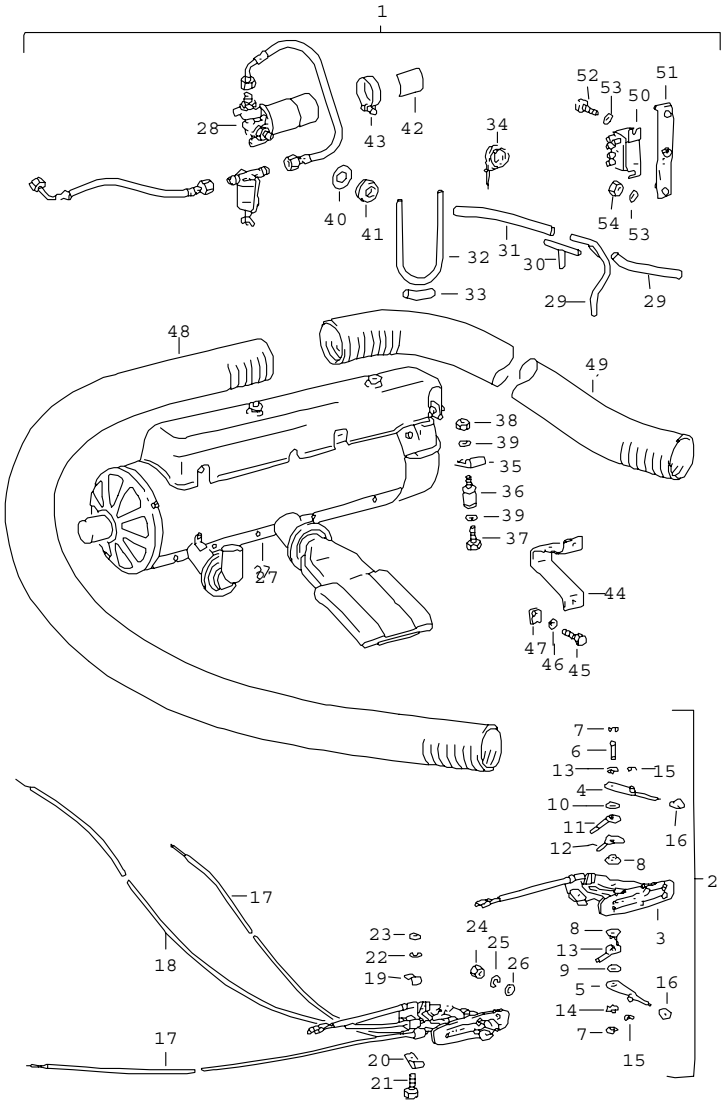

Pos	Part Number	Name	Remarks	Qty	Model
		heater - EBERSPAECHER - BN 4			
1	E 644 572 001 06	heater 6 V complete for subsequent installat.		1	
(1)	E 644 572 002 06	heater 12 V complete for subsequent installat.		1	
2	E 644 571 081 06	control switch complete		1	
3	E 644 571 801 06	switch housing		1	
4	E 644 571 086 06	lever heating		1	
5	E 644 571 085 06	lever ventilation		1	
6	E 644 571 817 06	shaft		1	
7	N 012 435 1	washer 5		2	
8	E 644 571 813 06	thrust bearing		2	
9	E 644 571 814 06	washer		1	
10	E 644 571 815 06	washer		1	
11	E 644 571 831 06	contact spring		1	
12	E 644 571 832 06	contact spring		1	
13	E 644 571 833 06	contact spring		1	
14	E 644 571 816 06	thrust washer		2	
15	900 116 003 01	lock washer 4		2	
16	E 644 571 811 06	knob black		2	
17	E 644 571 880 06	bowden cable 705 MM 990 MM		1	
18	E 644 571 883 06	bowden cable 1640 MM		1	
19	644 571 822 06	clamp		1	

Pos	Part Number	Name	Remarks	Qty	Model
20	E 644 571 821 06	clamp		1	
21	900 075 005 02	hexagon-head bolt M 5 X 15		1	
22	N 012 005 3	lock ring B 5		1	
23	E 900 198 001 02	square nut M 5		1	
24	900 076 011 02	hexagon nut M 6		2	
25	900 027 014 01	lock ring B 6		2	
26	N 011 524 7	washer 6,4		2	
27	E 644 572 501 06	heater 6 V		1	
(27)	E 644 572 502 06	heater 12 V		1	
28	E 644 572 511 06	fuel pump 5 V		1	
(28)	E 644 572 512 06	fuel pump 12 V		1	
29	E 644 201 095 00	fuel line with t-piece		1	
(29)	E 644 201 111 00	fuel line with t-piece		1	CARRERA 2000
30	E 644 201 111 16	fuel line with t-piece		1	CARRERA 2000
(31)	999 180 030 50	fuel hose A 6 X 240		1	
31	999 180 030 50	fuel hose		X	CARRERA 2000
32	E 644 201 929 16	pipeline		1	CARRERA 2000
33	E -	hose piece 8 X 65		1	CARRERA 2000
34	E 999 652 901 40	tie-wrap 140		1	
35	E 999 511 006 03	clip		1	
36	E 644 572 967 00	silentbloc heater		2	
(36)	E 644 572 967 01	silentbloc exhaust silencer		1	
37	N 010 208 5	hexagon-head bolt M 6 X 8		3	
38	900 076 010 02	hexagon nut M 6		3	
39	900 028 008 00	spring washer B 6		6	
40	E 644 572 593 00	sealing strip		1	
41	E 644 572 594 00	sealing rubber		1	
42	E 644 572 519 06	felt strip		1	
43	E 644 572 515 06	clip		1	
44	644 572 039 06	support heater		1	
45	900 187 018 02	hexagon-head tapping screw BZ 4,8 X 13		2	
46	900 151 027 02	washer A 5,3		2	
47	999 507 002 02	speed nut		2	
48	644 572 971 00	air hose 1500 MM		1	
49	644 572 971 00	breather hose 1400 MM		1	
53	900 028 002 00	spring washer A 5		3	
54	900 076 006 02	hexagon nut M 5		2	
-	644 612 015 06	wiring harness for heater		1	

- -- E N D -- -

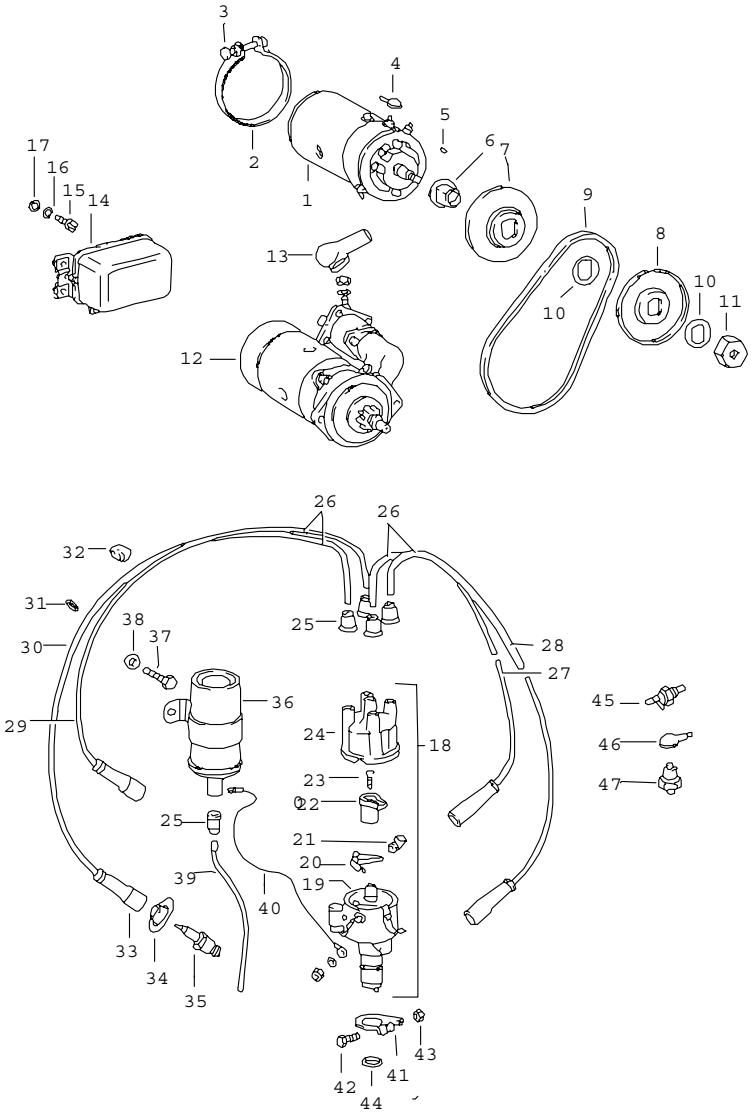

Pos	Part Number	Name	Remarks	Qty	Model
		electrical equipment engine			
1	E 616 603 101 00	dc generator LJ/GE 160/6/2500 L 2 6 VOLT M >> 601 001 M >> 085 218 M >> 800 148 M >> 601 001 M >> 085 218 M >> 800 148		1	 1600 1600 S 1600 S90 1600 1600 S 1600 S90
(1)	E 616 603 101 01	dc generator LJ/GEG 200/6/2600 L 6 VOLT M 601 002 >> M 085 219 >> M 800 149 >> M 601 002 >> M 085 219 >> M 800 149 >>		1	 1600 1600 S 1600 S90 1600 1600 S 1600 S90
(1)	E 616 603 105 01	dc generator LJ/GEGM 200/6/2600 L 24 6 VOLT		1	M
(1)	E 616 603 102 01	dc generator LJ/GEG 200/12/2700 L 12 VOLT		1	
(1)	616 603 106 01	dc generator LJ/GEGM 200/12/2700 L24 12 VOLT		1	M
2	546 09 301	restraining strap		1	
3	900 074 037 02	hexagon-head bolt		1	
4	E 616 109 381 00	protection cap		1	
5	N 012 705 1	spring 3 X 5		2	
6	547 09 304	hub		1	
7	539 09 315	pulley I		1	
8	539 09 316	pulley II		1	
9	999 192 006 50	narrow v-belt 9,5 X 825		1	
10	539 09 314	washer		10	
11	E 547 09 303	hexagon nut		1	

Pos	Part Number	Name	Remarks	Qty	Model
12	E 616 604 101 00	starter 6 VOLT		1	
(12)	E 616 604 102 02	starter 12 VOLT		1	
13	999 659 006 50	protection cap		1	
14	616 603 201 00	regulator switch RS/UA 160/6/24 6 VOLT M >> 601 001 M >> 085 218 M >> 800 148 M >> 601 001 M >> 085 218 M >> 800 148		1	 1600 1600 S 1600 S90 1600 1600 S 1600 S90
(14)	616 603 201 01	regulator switch RS/UA 200/6/23 6 VOLT M 601 002 >> M 085 219 >> M 800 149 >> M 601 002 >> M 085 219 >> M 800 149 >>		1	 1600 1600 S 1600 S90 1600 1600 S 1600 S90
(14)	E 616 603 205 01	regulator switch RS/UAM 200/6/A 1 6 VOLT		1	M
(14)	E 616 603 203 00	regulator switch 6 VOLT		1	1600 C/SC
(14)	616 603 202 01	regulator 12 VOLT		1	
(14)	616 603 206 01	regulator switch RS/UAM 200/12/A 1 12 VOLT		1	M
15	E 900 014 030 02	pan-head screw 5 X 20		3	
16	900 027 012 00	lock ring B 5		3	
17	900 025 003 02	washer 5,3		3	
18	616 602 201 02	distributor		1	1600 /S/S90
18	616 602 201 04	distributor		1	1600 C/SC
19	616 602 227 00	condenser LMKO 12 20 Z		1	

Pos	Part Number	Name	Remarks	Qty	Model
20	616 602 226 01	contact breaker point ZUH 9/6 Z		1	
21	616 602 226 01	contact breaker point ZKT 48/5 Z		1	
22	616 602 221 05	rotor ZVVT 5 Z 4 Z		1	
(22)	E 616 602 221 01	rotor		1	(F)
23	E 930 602 905 00	wiper contact NSK 2/1Z		1	
24	616 602 215 00	distributor cap ZVS 75Z 6Z		1	
-	999 619 121 00	suppressor cap for distributor BERU VES 1K - EM/W 1/20		5	(NL)
-	E 616 609 305 01	screened connector for distributor		5	(F)
25	999 659 001 40	protective cap		6	
(25)	616 609 903 00	rubber cap		6	(F)(NL)
26	616 109 952 00	set ignition cables		1	
27	E 616 109 952 01	ignition lead cylinder 1		1	
28	E 616 109 952 02	ignition lead cylinder 2		1	
29	E 616 109 952 02	ignition lead cylinder 3		1	
30	E 616 109 952 02	ignition lead cylinder 4		1	
31	E 999 701 010 50	o-ring		4	
32	616 09 904	cable holder		2	
-	911 609 510 00	cable plug		6	
(33)	692 609 302 00	spark plug socket		4	
-	999 659 001 40	protective cap		4	

Pos	Part Number	Name	Remarks	Qty	Model
-	E 616 609 904 00	protective cap		4	(F)
34	539 09 201	rubber cap		4	
35	999 170 023 90	spark plug BOSCH W 225 T 7		4	1600 /S/S90
(35)	999 170 023 90	spark plug BOSCH W 225 T 7		4	1600 /S/S90
(35)	E 999 170 021 90	spark plug CHAMPION LY158		4	1600 /S/S90
35	999 170 023 90	spark plug BERU D 225/14		4	1600 C/SC
36	616 602 108 00	ignition coil TK 6 A/3 6 VOLT		1	1600 /S/S90
36	616 602 108 00	ignition coil 6 VOLT red		1	1600 C/CS
(36)	616 602 109 00	ignition coil TK 12/A 3 12 VOLT		1	1600 /S/S90
36	616 602 109 00	ignition coil 12 VOLT		1	1600 C/CS
37	N 010 215 13	hexagon-head bolt		1	
38	N 011 524 7	washer		1	
39	E 616 109 952 05	ignition lead		1	
40	E 356 09 612	line		1	1600 /S/S90
40	E 616 609 053 00	line		1	1600C/SC
41	539 09 313	retaining ring		1	
42	900 074 014 00	hexagon-head bolt M 6 X 25		1	
43	900 076 010 02	hexagon nut M 6		1	
44	999 701 101 50	sealing ring		1	
45	616 107 805 01	sender oil temperature 6 VOLT		1	
(45)	616 107 806 00	remote temperature sensor oil temperature 12 VOLT		1	
46	999 659 011 50	protection cap		1	
47	901 613 571 01	oil pressure switch		1	1600 /S/S90
47	901 613 571 01	oil pressure switch		1	1600 C/SC
		radio suppressor condenser			
-	999 619 121 00	suppressor cap distributor EM/W 1/20		5	M
-	616 609 903 00	rubber cap WNK 1 Z 14 X		5	M
-	E 616 619 226 00	suppressor condenser EMKO 9 Z 17 Z		1	M
-	999 619 128 00	condenser EMKO 21 Z 2 Z		1	M
-	999 619 127 00	condenser EMKO 21 Z 1 Z		2	M
-	E 616 619 240 00	line suppressor condenser 3WEA 439 Z 2 Z		3	M
-	N 010 205 6	hexagon-head bolt M 5 X 10		1	M
-	E 616 619 251 00	cable terminal suppressor condenser		1	M
		telephone FUNKGERAET suppressor condenser			
-	E 616 619 201 00	suppression piece 6 AMP. EM/SE 6/2		1	M
-	E 616 619 202 00	suppression piece 75 AMP. EM/SE 75/2		1	M
-	E 616 619 226 00	suppressor condenser EMKO 9 Z 17 Z		1	M
-	E 616 609 904 00	protective cap WNK 1 Z 16 X		4	M
-	999 619 121 00	suppressor cap distributor EM/W 1/20		5	M
-	616 609 903 00	rubber cap WNK 1 Z 14 X		5	M

Pos	Part Number	Name	Remarks	Qty	Model	Pos	Part Number	Name	Remarks	Qty	Model
-	999 619 020 90	cable line dc generator regulator switch		1	M						
-	E 616 603 560 00	connecting piece line dc generator		1	M						
		- -- E N D -- -									

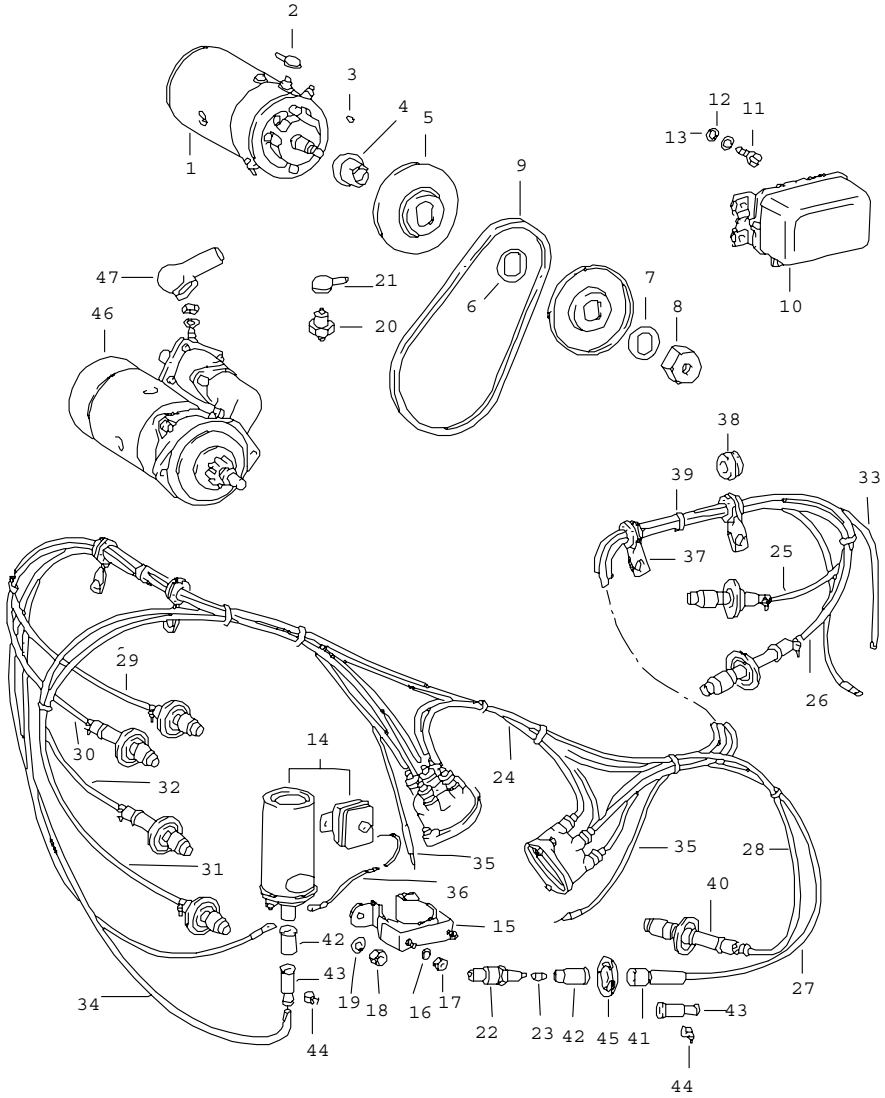

Pos	Part Number	Name	Remarks	Qty	Model
		electrical equipment engine			CARRERA
1	E 692 603 102 02	dc generator up to engine number P 97 262		1	587/1
(1)	E 587 603 102 00	dc generator from engine number on P 97 263		1	587/1
(1)	E 692 603 102 03	dc generator LJ/GEG 200/12/2700 L		1	587/2 692/3/3A
2	E 616 109 381 00	cap		1	
-	900 095 031 00	tensioning sleeve		1	587/1/2
3	N 012 705 1	spring 3X5		1	
4	E 692 603 425 00	hub		1	587/1
(4)	547 09 304	hub		1	587/2 692/3/3A
5	692 603 421 00	pulley half		2	587/1
(5)	547 09 301	pulley half		2	587/2 692/3/3A
6	E 692 603 491 00	shim		3	587/1
(6)	E 547 09 302	shim		4	587/2 692/3/3A
7	E 692 603 491 01	shim		3	587/1
(7)	539 09 314	shim		4	587/2 692/3/3A
8	E 692 603 427 01	hexagon nut		1	587/1
(8)	E 547 09 303	hexagon nut		1	587/2 692/3/3A
9	999 192 006 50	narrow v-belt		1	587/1/2
(9)	999 192 006 50	narrow v-belt		1	692/3/3A
10	616 603 202 01	regulator up to engine number P 97 262		1	587/1/2
(10)	E 587 603 202 00	regulator switch from engine number on P 97 263		1	587/1/2

Pos	Part Number	Name	Remarks	Qty	Model
(10)	E 692 603 202 02	regulator switch RS/UA 200/12/23		1	692/3/3A
11	E 900 014 034 02	pan-head screw M 5X15		3	587/1
(11)	900 138 022 02	pan-head tapping screw B 6,3X9,5		2	587/2
(11)	900 014 017 02	pan-head screw AM 5X15		3	692/3/3A
12	N 012 005 3	lock ring		3	
13	900 025 003 02	washer 5,3		3	
14	E 901 602 102 01	ignition coil TK 12 A10		2	
15	E 691 109 180 00	support		2	
16	900 027 011 01	lock ring		2	
17	900 076 002 02	hexagon nut M 4		2	
18	900 076 013 02	hexagon nut M 8		4	
19	900 027 015 02	lock ring		4	
20	901 613 571 01	oil pressure switch BOSCH SH/LO 10/1		1	WW
(20)	901 613 571 01	oil pressure switch MESSMER 1000/059		1	WW 692/3/3A
(20)	901 613 571 01	oil pressure switch from 356 C		1	WW 587/1/2
21	999 659 011 50	protection cap		1	
22	547 09 219 3	spark plug BOSCH W 275 T 2 BOSCH W 3 CC for races		8	692/3/3A
(22)	999 170 016 90	spark plug BOSCH W 240 T 2		8	WW 692/3
(22)	999 170 017 90	spark plug BOSCH W 250 T 2 BOSCH W 4 CC		8	WW 587/1/2 692/3A
(22)	999 170 017 90	spark plug BOSCH W 235 P 21		8	WW 587/1/2
-	PCG 170 016 90	sealing ring for spark plug		X	
23	E 547 09 222	nut KMVN 1 W 2 X		8	
24	E 692 609 501 00	ignition lead 1 set		1	
25	E 692 609 511 00	ignition lead 930 MM cylinder 1		1	
26	E 692 609 511 01	ignition lead 870 MM cylinder 1		1	
27	E 692 609 511 02	ignition lead 610 MM cylinder 2		1	
28	E 692 609 511 03	ignition lead 1175 MM cylinder 2		1	
29	E 692 609 511 04	ignition lead 1450 MM cylinder 3		1	
30	E 692 609 511 05	ignition lead 685 MM cylinder 3		1	
31	E 692 609 511 06	ignition lead 1088 MM cylinder 4		1	
32	E 692 609 511 07	ignition lead 954 MM cylinder 4		1	
33	692 609 511 08	ignition lead 840 MM ignition coil - distributor		1	

Pos	Part Number	Name	Remarks	Qty	Model
34	692 609 511 09	ignition lead 920 MM ignition coil - distributor		1	
35	E 692 609 531 00	line 1100 MM inner ignition ignition coil - distributor		1	
(35)	E 692 609 531 01	line 1020 MM outer ignition ignition coil - distributor		1	
36	E 691 109 190 00	line ignition coil - series resistor		2	
37	999 651 117 01	support		4	
38	999 702 029 50	cable guide		4	
39	E 547 09 224	o-ring		7	587/1/2
-	547 05 246	o-ring		7	587/1/2
(39)	000 97 302	o-ring		12	
40	692 609 301 00	spark plug socket long		4	587/1 692/3/3A
41	692 609 302 00	spark plug socket short		4	587/1 692/3/3A
42	999 659 034 40	protective cap	/V	8	
43	E 692 609 327 00	rubber cap	/H	8	587/1 692/3/3A
(43)	539 09 312	rubber cap for races		8	587/2
44	E 692 609 329 00	clamp		8	
45	539 09 201	rubber cap		8	
46	E 616 604 102 02	starter EEF 0,8/12 L when used up 678 604 101 00		1	587/1/2
47	999 659 006 50	protection cap		1	587/1/2
(47)	999 659 006 50	protection cap		1	692/3/3A
-	999 652 106 02	flat receptacle		1	587/1/2
-	999 652 142 40	push-on connector		1	587/1/2
-	PCG 615 101 00	relay		1	587/1/2
		car radio suppression set			
-	E 616 619 226 00	suppressor condenser for ignition coil		2	587/1/2
-	E 587 619 226 00	suppressor condenser for fuel pump		1	587/1/2
-	999 619 128 00	condenser for regulator		1	587/1/2
-	999 619 127 00	condenser for generator and regulator		2	587/1/2
-	999 652 106 02	flat receptacle		1	587/1/2
-	E 616 619 240 00	connecting line		3	587/1/2
-	E 999 652 151 40	distributor		1	587/1/2

- -- E N D -- -

Model	Year	MG	SG	Illustration	Restrictions	Update				
356	65	9	01	901-04		194	13:27	27.10.2005	PORSCHE	PET	PORSCHE

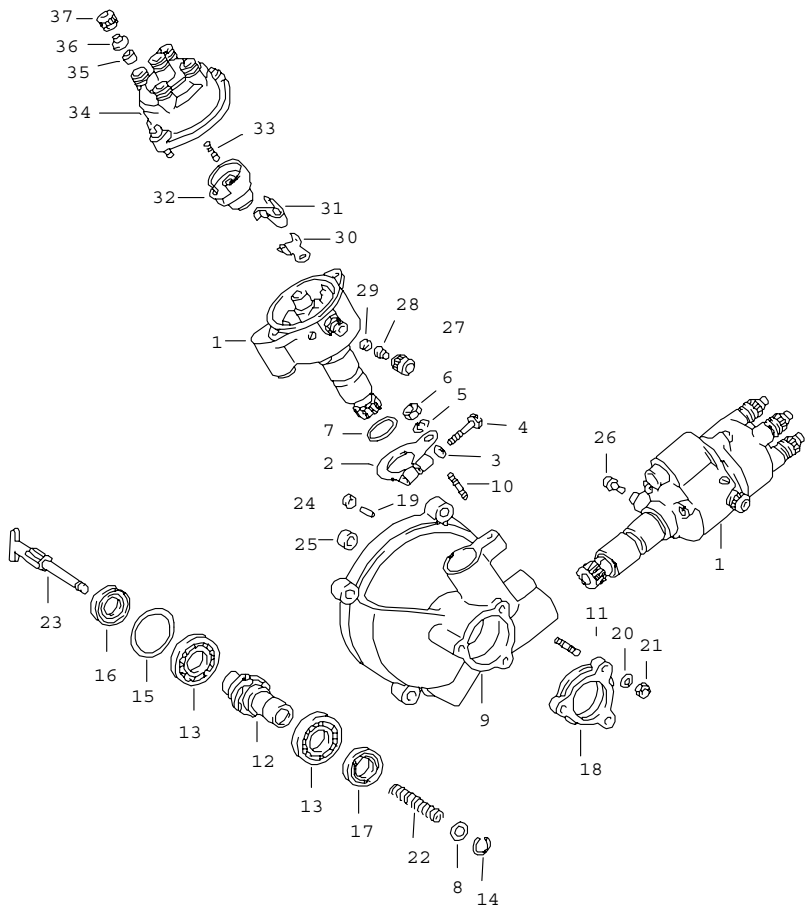

Pos	Part Number	Name	Remarks	Qty	Model
		distributor driving mechanism			CARRERA
1	E 587 602 201 00	distributor		2	587/2
(1)	692 602 201 00	distributor		2	587/1 692/3/3A
2	E 999 511 043 00	clamping piece		2	
3	900 028 008 01	spring washer B 6		2	
4	E 900 074 101 02	hexagon-head bolt M 6X20		2	
5	900 027 015 02	lock ring B 8		2	
6	502 08 310	hexagon nut M 8		2	
7	999 701 101 50	sealing ring		2	
8	E 999 031 001 01	washer		1	
9	E 692 109 131 00	distributor housing		1	
10	E 900 061 022 01	stud M 8X12		2	
11	999 062 017 02	stud M 6X18		3	
-	E PCG 109 900 00	driving mechanism for distributor comprising: POS. 12 + 23		1	
12	E 692 109 141 01	drive shaft		1	
13	900 052 008 00	deep-groove ball bearing 16004 DIN 625 (20X42X8)		2	
14	E 900 042 002 01	circlip 15X1		1	
15	E 692 602 471 00	shim 0,05 MM		1	
(15)	E 692 602 471 01	shim 0,08 MM		1	
(15)	E 692 602 471 02	shim 0,10 MM		1	

Pos	Part Number	Name	Remarks	Qty	Model
16	E 999 112 001 40	radial sealing ring A 20X32		1	587/1/2
(16)	900 112 002 40	radial sealing ring A 20X32		1	692/3/3A
17	E 999 112 001 40	radial sealing ring A 20X32		1	587/1/2
(17)	900 112 003 40	radial sealing ring A 20X32		1	
18	E 692 109 133 00	cover		1	
19	E 692 109 135 00	nozzle		1	
20	900 028 008 01	spring washer B 6		3	587/1/2
(20)	900 028 003 01	spring washer A 6		3	692/3/3A
21	900 076 010 02	hexagon nut M 6		3	
22	E 692 109 151 00	compression spring		1	
23	E 692 109 143 00	clutch		1	
24	539 01 122	sealing ring		1	
25	E 911 101 123 00	sealing ring		1	
26	692 602 227 00	nipple		2	
27	E 692 602 228 00	union nut ZVMU 2 Z 1 X 843		2	
28	E 692 602 231 00	sleeve ZV 2/5414 (843)		2	
29	E 692 602 229 00	rubber ring ZV 2/5463		2	
30	E 692 602 232 00	support for contact with ZVKT 5 Z 1 Z		2	
31	E 692 602 233 00	contact-breaker carrier with ZVUH 4 Z 3 Z		2	
32	E 692 602 222 00	rotor with resistor ZV 2/5211 Z		2	
33	E 930 602 905 00	wiper contact with spring NSK 2/1 Z		2	
34	E 692 602 223 00	distributor cap with fastening screw ZV 2/4413		2	
35	E 692 602 226 00	rubber ring WNR 22/1 X		10	
36	E 692 602 225 00	sleeve WMH 20/3 X 843		10	
37	E 692 602 224 00	union nut WMU 101/1 X		10	

- -- E N D -- -

Model	Year	MG	SG	Illustration	Restrictions	Update		
356	65	9	01	901-05		194	13:27	27.10.2005

Pos	Part Number	Name	Remarks	Qty	Model
		suppressor condenser			
-	999 619 121 00	suppressor cap for distributor EM/W/1/20		5	
-	616 609 903 00	rubber cap WNK 1 Z 14 X		5	
-	E 616 619 226 00	suppressor condenser EMKO 9 Z 17 Z		1	
-	999 619 128 00	condenser EMKO 21 Z 2 Z		1	
-	999 619 127 00	condenser EMKO 21 Z 1 Z		2	
-	E 616 619 240 00	line 3 WEA 439 Z 2 Z for suppressor condenser 21 Z 2 Z		3	
-	N 010 205 6	hexagon-head bolt M 5 X 10		1	
-	E 616 619 251 00	cable terminal for suppressor condenser		1	
		- -- E N D -- -			

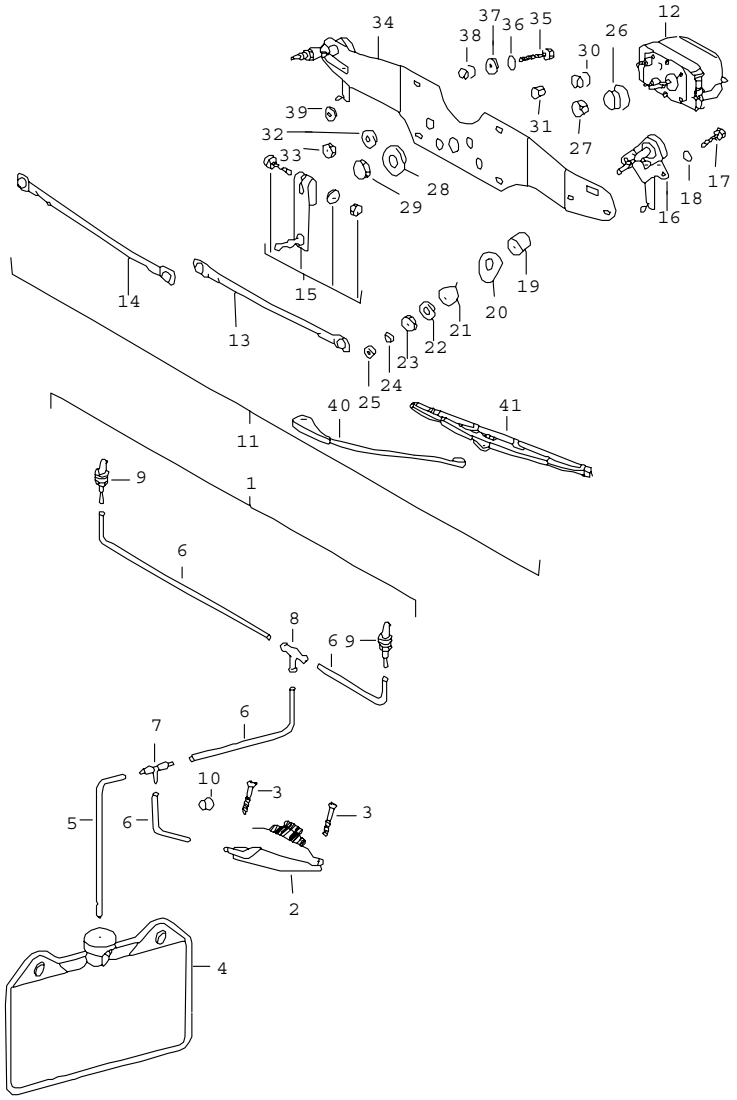

Pos	Part Number	Name	Remarks	Qty	Model
		windscreen washer system windscreen wiper system			356 B-T5 ROADSTER
1	E 644 628 070 05	windscreen washer system complete	/LL	1	
(1)	756 628 070 00	windscreen washer system complete with pump large		1	CARRERA ABARTH 692/3/3A
(1)	E 644 628 070 06	windscreen washer system complete	/RL	1	
2	644 628 073 05	pump windscreen washer system		1	
-	E 644 628 712 06	engine windscreen washer system - SWF - 12 V		1	CARRERA GT:M
-	E 644 613 502 00	switch traction windscreen washer system 5-pole		1	CARRERA GT:M
3	E 900 022 002 00	lens-head screw 4 X 25		1	
4	644 628 720 00	water reservoir		1	
5	E 644 628 731 05	suction hose 640 MM with strainer	/LL	1	
(5)	E 644 628 731 06	suction hose 1250 MM with strainer	/RL	1	
-	914 628 901 10	breather hose		*	
6	--- --- --- --	1850 MM	/LL	X	
(6)	--- --- --- --	2500 MM	/RL	X	
7	644 628 746 00	valve		1	
8	644 628 745 00	t-piece		1	
9	644 628 741 02	spray nozzle		2	
10	999 702 020 50	rubber sleeve 8 X 12 X 9		2	

Pos	Part Number	Name	Remarks	Qty	Model
11	644 628 011 00	windscreen wiper system - SWF - 6 V	/LL	1	ROADSTER
(11)	644 628 011 02	windscreen wiper system - SWF - 6 V	/LL	1	ROADSTER:M
(11)	644 628 011 10	windscreen wiper system - BOSCH - 6 V		1	COUPE -REUTTER- CABRIO HARDTOP
(11)	644 628 011 12	windscreen wiper system - BOSCH - 6 V		1	COUPE:M CABRIO:M HARDTOP:M
(11)	644 628 011 20	windscreen wiper system - SWF - 6 V	/RL	1	ROADSTER
(11)	644 628 011 22	windscreen wiper system - SWF - 6 V	/RL	1	ROADSTER:M
(11)	644 628 012 00	windscreen wiper system - SWF - 12 V		1	CARRERA GT
(11)	644 628 012 02	windscreen wiper system - SWF - 12 V		1	CARRERA GT:M
(11)	644 628 012 12	windscreen wiper system - BOSCH - 12 V		1	CARRERA GT:M
(11)	756 628 012 10	windscreen wiper system - BOSCH - 12 V		1	CARRERA ABARTH 692/3/3A
12	644 628 015 00	wiper motor - BOSCH--SWF - 6 V		1	
(12)	E 644 628 016 00	wiper motor - BOSCH--SWF - 12 V		1	CARRERA GT
-	E 644 628 171 00	wiper contact wiper motor - SWF -		2	ROADSTER
-	E 644 628 171 10	wiper contact wiper motor - BOSCH -		2	COUPE -REUTTER- CABRIO HARDTOP
13	E 644 628 021 00	crank - SWF -	/L	1	ROADSTER
(13)	644 628 021 10	joint rod - BOSCH -	/L -	1	COUPE -REUTTER- CABRIO HARDTOP
14	E 644 628 023 00	connecting rod - SWF -	/R	1	ROADSTER
(14)	E 644 628 023 10	connecting rod - BOSCH -	/R	1	COUPE -REUTTER- CABRIO HARDTOP
15	E 644 628 021 00	crank - SWF -		1	ROADSTER
(15)	644 628 024 10	crank - BOSCH -		1	COUPE -REUTTER- CABRIO HARDTOP
16	E 644 628 025 00	transmission		2	
-	E 644 628 265 00	threaded plate for transmission 644.628.025.00		2	
17	900 075 005 02	hexagon-head bolt M 5 X 15		4	
18	928 631 439 00	washer J 5,3		4	
19	E 644 628 261 00	distance roll		2	
20	PCG 628 292 00	rubber inner		2	
21	PCG 628 292 00	rubber outer		2	
22	644 628 295 00	washer		2	
23	644 628 296 00	hexagon nut		2	
24	644 628 297 00	rubber seal		2	
25	E 644 628 298 00	cap		2	
26	E 644 628 192 00	rubber sleeve		1	
27	E 644 628 191 00	spacer sleeve		1	
28	E 644 628 193 00	washer		1	

Pos	Part Number	Name	Remarks	Qty	Model
29	E 644 628 194 00	hexagon nut		1	
30	E 644 628 196 00	rubber sleeve		2	
31	E 644 628 195 00	spacer sleeve		2	
32	E 644 628 197 00	washer		2	
33	E 644 628 198 00	hexagon nut		2	
34	E 644 628 251 00	wiper frame		1	
35	900 074 014 01	hexagon-head bolt M 6 X 25		4	
36	N 012 007 2	lock ring A 6		4	
37	900 151 003 02	washer A 6,4		4	ROADSTER
(37)	E 900 035 001 00	washer R 7		4	COUPE -REUTTER- CABRIO HARDTOP
38	999 702 020 50	rubber sleeve 8 X 12 X 9		4	
39	644 628 262 00	spacer		4	
40	644 628 301 10	wiper arm - SWF -	/LL/L	1	ROADSTER
(40)	644 628 301 10	wiper arm - BOSCH -	/L/R	2	COUPE -REUTTER- CABRIO HARDTOP
(40)	644 628 301 10	wiper arm - SWF -	/LL/R	1	ROADSTER
(40)	E 644 628 303 05	wiper arm - SWF -	/RL/L	1	ROADSTER
(40)	E 644 628 304 05	wiper arm - SWF -	/RL/R	1	ROADSTER
41	644 628 311 10	wiper blade - SWF -	/L/R	2	ROADSTER
(41)	644 628 311 10	wiper blade - BOSCH -	/L/R	2	COUPE -REUTTER CABRIO HARDTOP
		- -- E N D -- -			

Model	Year	MG	SG	Illustration	Restrictions	Update			
356	65	9	04	904-05		194	13:27	27.10.2005	PORSCHE PET PORSCHE

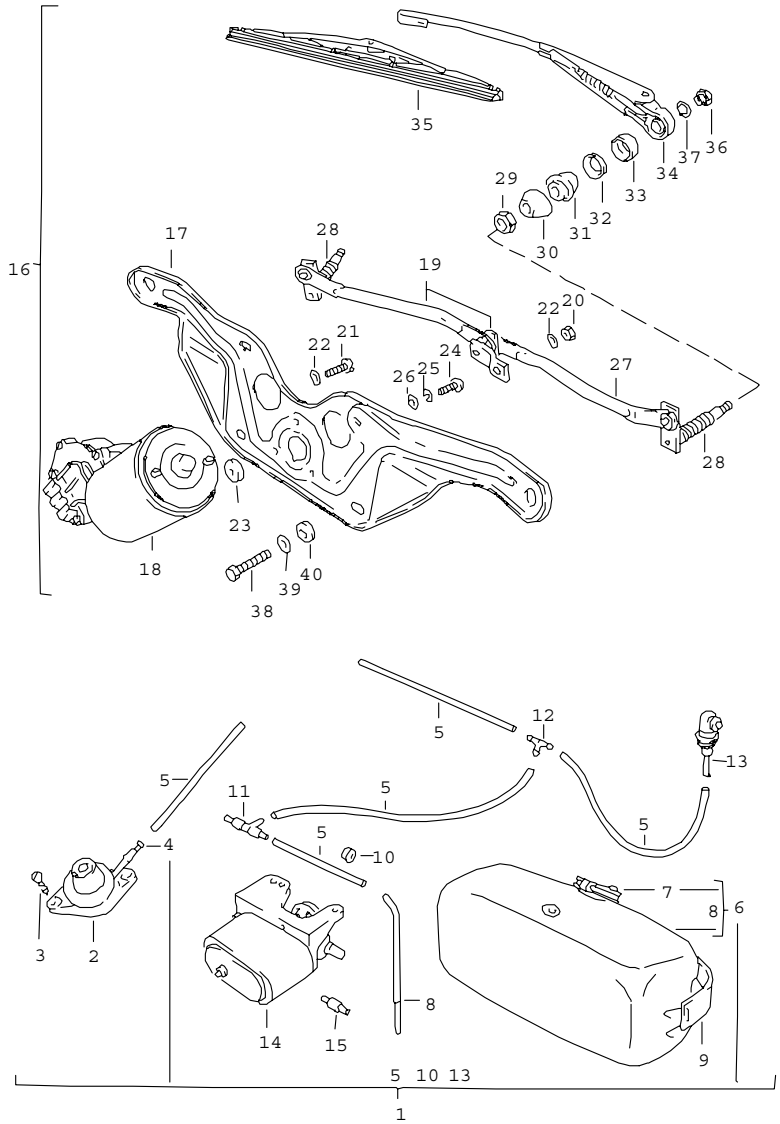

Pos	Part Number	Name	Remarks	Qty	Model
		windscreen washer system windscreen wiper system - ROADSTER - see group 9-04-00			356 B-T6 356 C
1	E 644 628 070 07	windscreen washer system complete	/LL	1	
(1)	E 644 628 070 08	windscreen washer system complete	/RL	1	
2-4	--- --- --- --	not for windscreen washer system electric		X	
2	644 628 073 05	pump		1	
3	E 900 022 002 00	lens-head screw 4 X 25		2	
4	E 644 628 739 05	connecting piece		1	
5	914 628 901 10	breather hose		X	
6	644 628 720 06	water reservoir complete		1	
7	911 628 167 00	cover		1	
8	E 644 628 731 07	connection piece		1	
9	644 628 091 00	retaining strap complete		1	
10	999 702 020 50	rubber sleeve 8 X 12 X 9		1	
11	644 628 746 00	valve not for windscreen washer system electric		1	
12	644 628 745 00	t-piece		1	
13	644 628 741 41	spray nozzle		2	
14	E 644 628 711 06	engine 6 V windscreen washer system electric		1	M
(14)	E 644 628 712 06	engine 12 V windscreen washer system electric		1	M

Pos	Part Number	Name	Remarks	Qty	Model
15	644 628 743 05	suction valve windscreen washer system electric		1	
-	E 900 014 024 02	pan-head screw AM 6 X 30 windscreen washer system electric		2	
-	900 076 010 02	hexagon nut M 6 windscreen washer system electric		2	
-	N 011 524 7	washer 6,4 windscreen washer system electric		2	
		windscreen wiper system not for - ROADSTER -			
16	E 644 628 017 15	windscreen wiper system - BOSCH - 6 V without 34 + 35		1	
(16)	644 628 018 17	windscreen wiper system - BOSCH - 12 V without 34 + 35		1	
17	644 628 251 12	wiper frame		1	
18	644 628 015 12	wiper motor - BOSCH - 6 V		1	
(18)	E 644 628 016 12	wiper motor - BOSCH - 12 V		1	
19	644 628 024 12	crank with joint rod	/L	1	
20	900 076 011 02	hexagon nut M 6		1	
21	E 900 014 009 02	pan-head screw AM 6 X 15		3	
22	N 012 226 5	spring washer A 6		4	
23	644 628 195 12	washer		1	
24	E 900 014 004 02	pan-head screw AM 5 X 15		1	
25	900 027 012 00	lock ring B 5		1	
26	E 900 031 006 00	washer 5,3		1	
27	E 644 628 021 12	joint rod	/R	1	
28	E 644 628 025 12	wiper bearing with crank		2	
29	E 644 628 282 12	hexagon flat nut		4	
30	PCG 628 292 12	rubber		2	
31	PCG 628 292 12	rubber		2	
32	644 628 283 12	concave washer		2	
33	644 628 281 12	rubber cap		2	
34	644 628 301 12	wiper arm	/LL	2	
(34)	E 644 628 303 12	wiper arm	/RL	2	
(34)	E 644 628 301 13	wiper arm	/LL	2	356 C: COUPE -REUTTER- CARRERA 2000
35	644 628 311 10	wiper blade		2	
(35)	644 628 311 13	wiper blade	/LL	2	356 C: COUPE
36	644 628 284 12	cap nut		2	
37	644 628 285 12	spring washer		2	
38	900 074 014 01	hexagon-head bolt M 6 X 25		3	
39	N 011 612 3	washer R 7		3	
40	E 999 702 016 50	rubber sleeve 7,5 X 11,5 X 8,5		3	
-	999 704 122 50	rubber base 12 X 7,5 X 2,5 joint rod crank		2	

Pos	Part Number	Name	Remarks	Qty	Model	Pos	Part Number	Name	Remarks	Qty	Model
-	E 999 703 035 50	plug rubber rubber wiper frame - -- E N D -- -	/LL	1	356 C: COUPE -REUTTER- CARRERA 2000						

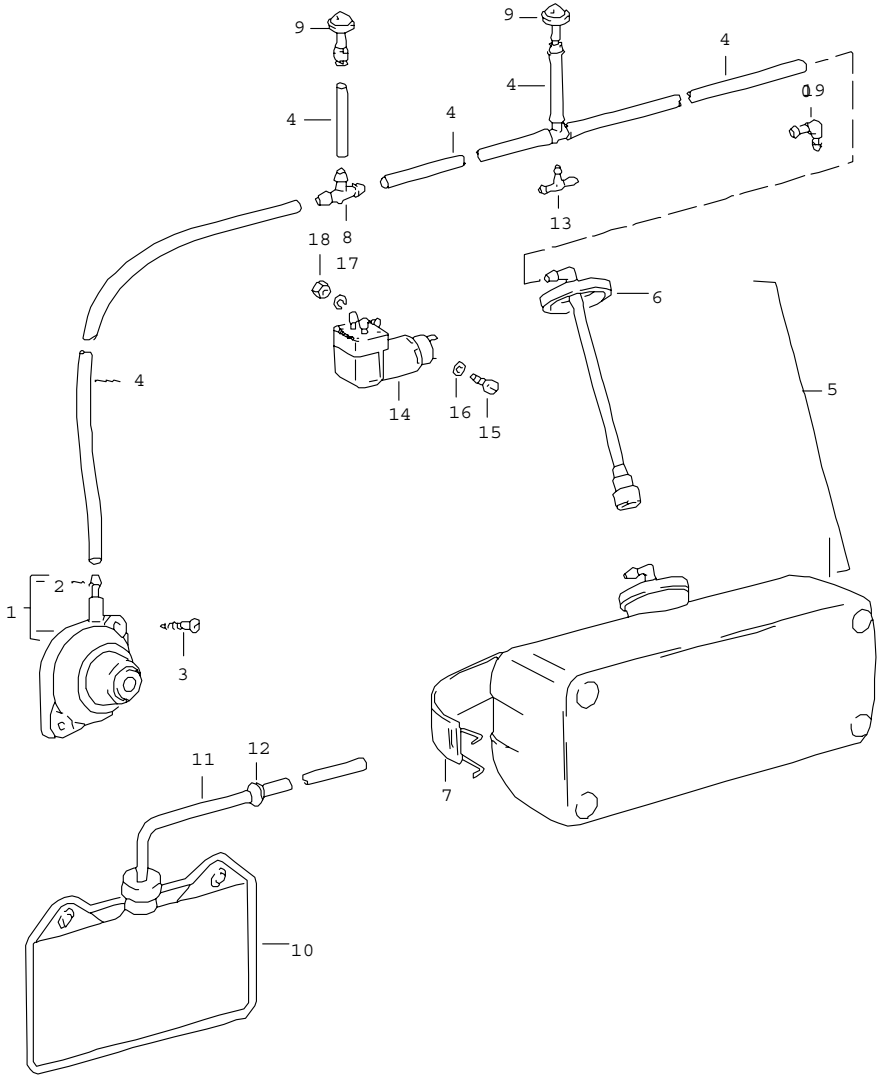

Pos	Part Number	Name	Remarks	Qty	Model
		windscreen washer system			356 B/C
		- COUPE/CABRIO-HARDTOP -			
1	E 644 628 073 06	pump		1	
2	E 644 628 739 05	connecting piece		1	
3	E 900 022 002 00	lens-head screw 4 X 25		2	
4	914 628 901 10	breather hose		X	
5	PCG 628 720 07	water reservoir complete		1	
6	901 628 723 20	cover		1	
7	644 628 091 00	retaining strap		1	
-	999 702 020 50	rubber sleeve		1	
8	644 628 745 00	t-piece	/LL /RL	2 1	
		windscreen washer system electric		1	
9	644 628 741 02	spray nozzle		2	
-	E 644 628 905 00	cap chrome for spray nozzle		2	
10	644 628 720 00	water reservoir	/RL	1	
11	E 644 628 731 06	suction hose with strainer	/RL	1	
12	E 999 702 034 50	rubber sleeve 6 X 11 X 8	/RL	1	
13	644 628 746 00	valve	/RL	1	
14	E 644 628 074 00	pump 6 V		1	356 C:M
(14)	E 644 628 074 02	pump 12 V		1	356 C:M
-	E 644 613 513 00	wiper switch 6 V		1	356 C:M
-	E 644 613 514 00	wiper switch 12 V		1	356 C:M

Pos	Part Number	Name	Remarks	Qty	Model	Pos	Part Number	Name	Remarks	Qty	Model
15	E 900 014 005 02	pan-head screw AM 5 X 15		1	356 C:M						
16	900 025 003 02	washer 5,3		1	356 C:M						
17	900 027 003 01	lock ring A 5		1	356 C:M						
18	900 076 006 02	hexagon nut M 5		1	356 C:M						
19	E 644 628 754 00	angled pipe		1	356 C:M						
		- -- E N D -- -									

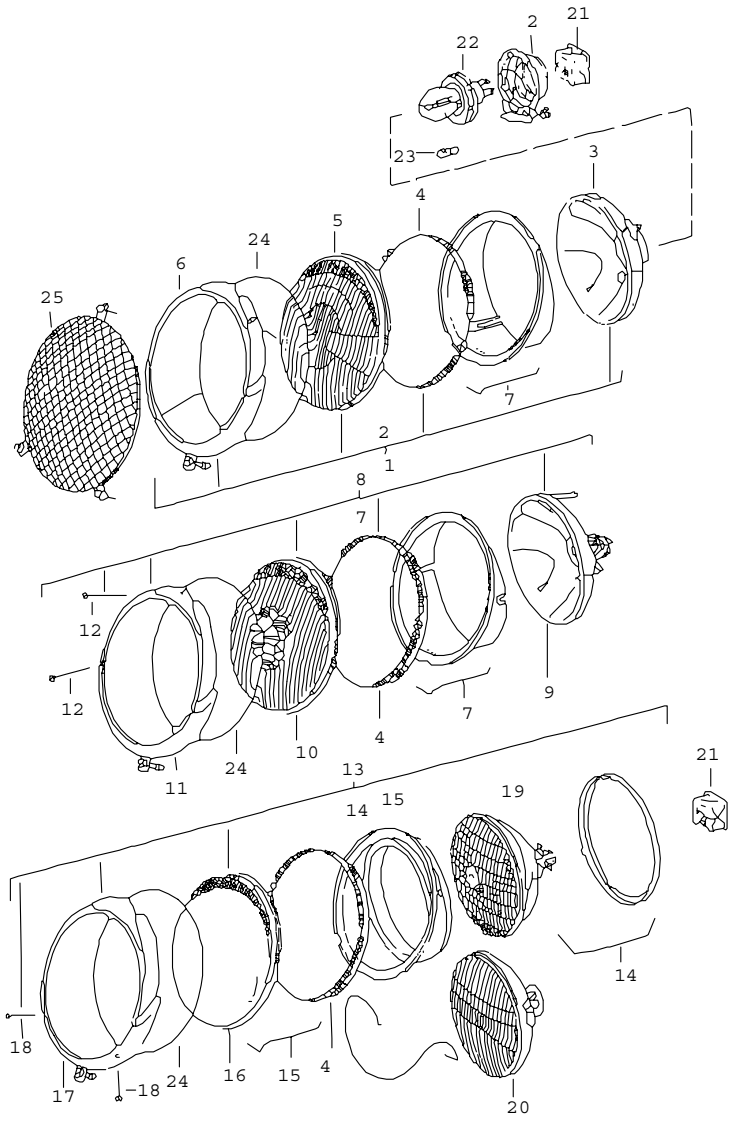

Pos	Part Number	Name	Remarks	Qty	Model
		headlamp			
1	644 631 101 07	headlamp complete -BOSCH- asymmetrical not for (USA)		2	356 B
(1)	644 631 101 07	headlamp complete -BOSCH- asymmetrical not for (USA)		2	356 C
2	644 631 171 02	bulb holder complete		2	
3	E 644 631 117 02	reflector		2	
4	911 631 967 00	gasket		2	
5	901 631 111 00	lens (E1 4430)		2	356 B
(5)	901 631 111 00	lens (E1 4474)		2	356 B/C
(5)	901 631 111 00	lens (E1 4487)		2	356 C
6	644 631 101 07	headlamp chrome		2	
7	644 631 122 00	locking spring		14	
8	644 631 101 00	headlamp complete -BOSCH- normal		2	
9	E 644 631 117 00	reflector		2	
10	E 644 631 111 00	lens		2	
11	E 644 631 112 00	headlamp ring chrome		2	
12	E 644 631 113 00	adjusting screw M 3		4	
-	N 011 005 14	hexagon nut for headlamp adjustment M 5		2	CARRERA ABARTH 692/3/3A

Pos	Part Number	Name	Remarks	Qty	Model
13	E 644 631 101 31	headlamp -HELLA- "SEALED BEAM" without headlamp unit		2	(USA)
14	E 644 631 124 31	locking spring		12	
15	E 644 631 122 31	locking spring		14	
16	644 631 111 31	lens		2	
17	E 644 631 112 31	headlamp ring chrome		2	
18	E 644 631 113 31	adjusting screw		4	
19	E 644 631 105 30	headlamp unit "SEALED BEAM" original		2	
(19)	E 999 631 108 90	bulb "SEALED BEAM" 12 V		2	CARRERA GT
21	E 644 631 107 03	connector -SB-		2	
22	E 900 631 009 90	bulb 6 V, 45/40 W-ES for 644.631.101.02		2	
(22)	900 631 109 90	bulb 12 V, 45/40 W-ES for 644.631.101.02		2	CARRERA GT
23	E 900 631 003 90	bulb 6 V, 4 W for 644.631.101.00 644.631.101.02		2	
(23)	900 631 103 90	bulb 12 V, 4 W for 644.631.101.00 644.631.101.02		2	CARRERA GT
24	PCG 631 115 00	sealing rubber wing		2	
		- -- E N D -- -			

Model	Year	MG	SG	Illustration	Restrictions	Update	13:28	27.10.2005	PORSCHE PET PORSCHE
356	65	9	05	905-05		194			

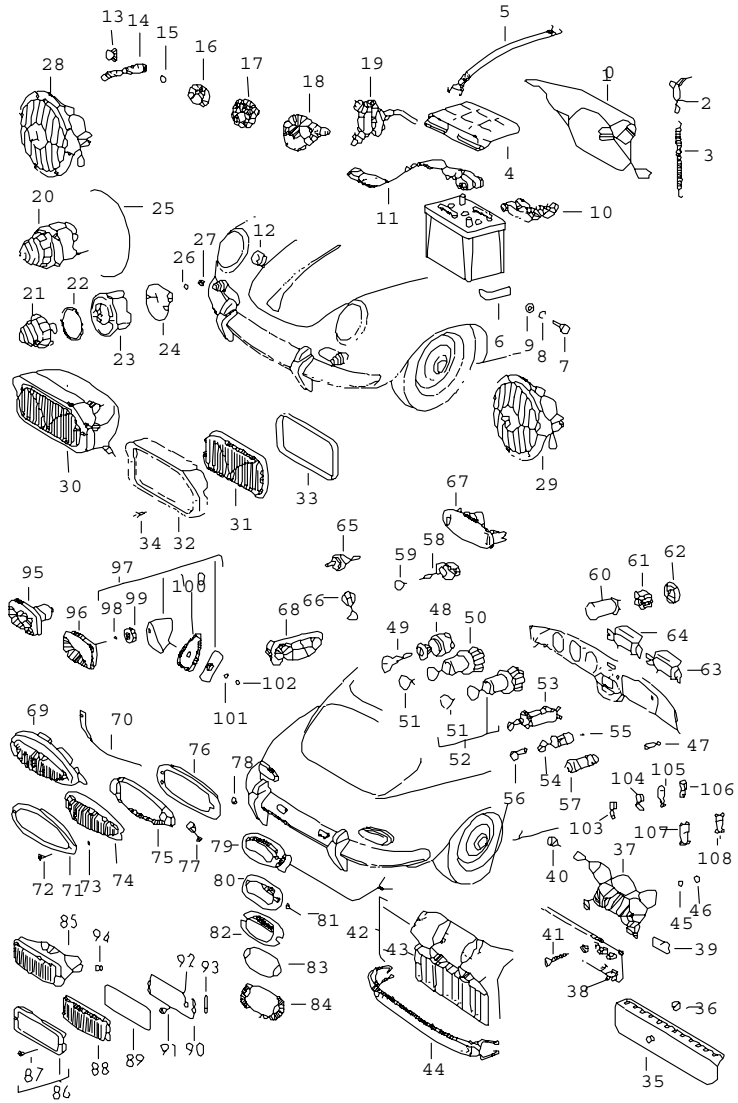

Pos	Part Number	Name	Remarks	Qty	Model
		lights and switch			
-	900 611 001 90	battery 6V 84AH		1	
-	644 611 102 10	battery 12V 50AH		1	
-	644 611 102 11	battery 12V 60AH		1	
-	756 611 102 00	battery 12V 45AH TYP 6 N5		1	CARRERA ABARTH 692/3/3A
1	644 611 015 02	battery cover		1	356 B-T5
(1)	E 644 611 015 10	battery cover 12 VOLT		1	CARRERA 1600 GT
(1)	756 611 015 00	battery cover		1	CARRERA ABARTH 692/3/3A
2	644 611 151 00	support		2	356 B-T5
	GRV				
3	644 611 153 00	tension spring		2	356 B-T5
4	644 611 121 00	battery cover		1	356 B-T6
(4)	E 644 611 121 10	battery cover 12 VOLT		1	356 B-T6:M 356 C:M
5	E 644 611 155 00	restraining strap		1	
6	E 644 612 307 00	retaining bracket battery 6 VOLT		1	
(6)	E 644 612 307 10	retaining bracket battery 12 VOLT		1	
7	900 075 085 02	hexagon-head bolt M 8 X 20		1	
8	900 027 015 02	lock ring A 8		1	
9	900 151 004 12	washer A 8,4		1	
(10)	901 611 311 00	terminal clamp		1	356 B-T5

Pos	Part Number	Name	Remarks	Qty	Model
10	644 611 311 10	terminal 6 VOLT		1	CARRERA 1600 GT 356 B-T6 356 C
(10)	644 611 312 10	terminal 12 VOLT		1	M CARRERA 2000
(11)	644 612 301 00	ground strap		1	356 B-T5
11	644 612 301 01	ground strap 6 VOLT		1	356 B-T6 356 C
(11)	644 612 301 01	ground strap 12 VOLT		1	M CARRERA 2000 GT
-	644 612 001 05	wiring harness		1	356 B-T5
-	E 644 612 001 15	wiring harness		1	CARRERA 1600 GT
-	E 644 612 131 05	protective tube for wiring harness		1	
-	E 644 612 001 06	wiring harness front trunk		1	356 B-T6 356 C
-	644 612 001 10	wiring harness front trunk		1	CARRERA 2000 COUPE :M -REUTTER- CABRIO:M HARDTOP:M
-	644 612 002 06	wiring harness dashboard		1	356 B-T6: COUPE -REUTTER- CABRIO HARDTOP
-	E 644 612 002 46	wiring harness dashboard		1	ROADSTER
-	E 644 612 002 07	wiring harness dashboard 6 VOLT	/L	1	356 C: COUPE -REUTTER- CABRIO HARDTOP
-	644 612 002 08	wiring harness dashboard 12 VOLT		1	356 C:M CARRERA 2000
-	E 644 612 007 07	wiring harness rear end		1	356 B-T6
-	E 644 612 007 07	wiring harness rear end 6 VOLT		1	1600 C/SC
-	E 644 612 007 07	wiring harness rear end 12 VOLT		1	1600 C/SC:M
-	644 612 007 08	wiring harness rear end	-63	1	CARRERA 2000
-	644 612 007 08	wiring harness rear end	64-	1	CARRERA 2000
-	911 612 022 20	wiring harness for battery		1	356 B-T6 356 C
-	644 612 037 06	wiring harness regulator generator		1	356 B-T6
-	E 644 612 037 07	wiring harness regulator generator 6 VOLT		1	356 C: COUPE -REUTTER- CABRIO HARDTOP
-	E 644 612 037 12	wiring harness regulator generator 12 VOLT		1	356 C:M CARRERA
-	644 612 035 07	wiring harness interior lights	/L	1	COUPE CARRERA 2000
-	E 644 612 045 00	additional cables ignition coil relay		1	CARRERA 2000
-	E 644 612 833 00	sticker 12 VOLT		1	356 C
-	E 999 702 044 50	rubber sleeve 20 X 28 X 9,5		1	
12	E 999 702 036 50	rubber sleeve 8 X 10 X 7 headlamp casing		2	356 B-T5: COUPE -REUTTER- CABRIO HARDTOP
(12)	999 702 020 50	rubber sleeve 8 X 12 X 9 headlamp casing		2	ROADSTER

Pos	Part Number	Name	Remarks	Qty	Model
13	999 702 020 50	rubber sleeve 8 X 12 X 9 headlamp casing high volume horn brake light		5	356 B-T6 356 C
14	911 025 612 00	drain tube headlamp casing		2	356 B-T6 356 C
15	E 999 702 015 50	rubber sleeve 6 X 9 X 8 cable door contact switch and brake light		3	356 B-T6 356 C
16	999 702 031 50	grommet 16 X 25 X 8,5 pedal floor board		1	356 B-T6 356 C
17	E 644 025 642 00	gasket		1	356 B-T6
18	911 611 921 00	rubber boot cable starter tunnel		1	356 B-T6 356 C
19	E 644 613 521 50	switch battery		1	356 C:M
(20)	644 631 401 05	position light complete white	/L	1	356 B-T5
20	644 631 401 06	position light complete yellow	/L	1	356 B-T6 356 C
(20)	E 644 631 402 05	position light white complete	/R	1	356 B-T5
(20)	644 631 402 06	position light complete yellow	/R	1	356 B-T6 356 C
(21)	644 631 411 01	lens position light white		2	356 B-T5
21	644 631 411 06	lens position light yellow		2	356 B-T6 356 C
22	644 631 413 01	rubber seal		2	
23	E 644 631 453 05	bracket direction indicator light	/V/L	1	356 B-T6 356 C CARRERA 2000
(23)	E 644 631 454 05	bracket direction indicator light	/V/R	1	356 B-T6 356 C CARRERA 2000
24	644 631 415 06	rubber cap		2	
25	644 025 928 00	piping		2	
26	900 027 003 02	lock ring A 5		4	
27	900 076 006 02	hexagon nut M 5		4	
(28)	E 644 635 101 00	high volume horn low-pitched	/R	1	356 B-T5
28	E 644 635 101 06	high volume horn low-pitched 6 VOLT	/R	1	356 B-T6 356 C
(28)	644 635 102 00	high volume horn low-pitched 12 VOLT	/R	1	M CARRERA 2000 GT
(28)	644 635 103 00	fanfare low-pitched -BOSCH- 6 VOLT	/R	1	M CARRERA 2000 GT
(28)	E 644 635 104 00	fanfare low-pitched -BOSCH- 12 VOLT	/R	1	M CARRERA 2000 GT
(29)	E 644 635 111 00	high volume horn high-pitched	/L	1	356 B-T5
29	E 644 635 111 06	high volume horn high-pitched 6 VOLT	/L	1	356 B-T6 356 C
(29)	E 644 635 112 00	high volume horn high-pitched 12 VOLT	/L	1	M CARRERA 2000 GT
(29)	E 644 635 113 00	fanfare high-pitched -BOSCH- 6 VOLT	/L	1	M CARRERA 2000 GT

Pos	Part Number	Name	Remarks	Qty	Model
(29)	E 644 635 114 00	fanfare high-pitched -BOSCH- 12 VOLT	/L	1	M CARRERA 2000 GT
-	E 644 635 102 16	high volume horn -CLAXON-		1	CARRERA 2000 GT
-	900 075 042 02	hexagon-head bolt M 10 X 28		2	356 B/C
-	N 011 010 6	hexagon nut M 10		2	356 B/C
-	644 635 115 00	terminal for high volume horn		4	CARRERA 2000
-	644 635 115 00	terminal for high volume horn		2	CARRERA 2000 GT
-	900 075 040 02	hexagon-head bolt M 10 X 20		X	CARRERA 2000
-	900 075 043 02	hexagon-head bolt M 10 X 30		X	CARRERA 2000
(30)	E PCG 631 201 00	fog headlamp white with reflector white		2	M
-	E 900 631 012 90	bulb 6V35W		2	
-	E PCG 631 126 90	halogen bulb 6V		2	
-	E 900 631 112 90	bulb 12V 35W		2	
-	900 631 125 90	halogen bulb 12V		2	
(31)	E 644 631 211 04	glass fog headlamp white		2	
32	E 644 631 212 03	cover chrome		2	
33	E 644 631 214 03	gasket		2	
34	E 900 073 001 02	oval-head screw M 4 X 16 X 2		4	

Pos	Part Number	Name	Remarks	Qty	Model
-	PCG 615 101 00	relay fog headlamp		1	M
-	644 615 106 00	relay fog headlamp 12 VOLT		1	M CARRERA 2000 GT
35	E 644 612 801 00	fuse box		1	356 B-T5
36	E 644 612 691 00	rubber buffer		2	356 B-T5
-	N 017 121 1	safety fuse 8 AMP.		6	
-	N 017 121 5	safety fuse 25 AMP.		6	
37	E 644 612 085 06	plate		1	356 B-T6 356 C
38	E 644 612 801 06	fuse box with safety fuse		1	356 B-T6 356 C
-	644 612 802 00	fuse box 2-pole for sunroof and antenna electric		1	M CARRERA 2000
39	999 507 002 02	speed nut		6	356 B-T6 356 C
40	E 900 141 005 02	tapping screw BZ 4,8 X 13		4	356 B-T6 356 C
41	E 900 139 004 02	counters. head tapp. screw BZ 4,8 X 19		2	356 B-T6 356 C
42	644 612 083 06	cap with sticker		1	356 B-T6 356 C
43	E 644 612 831 06	sticker		1	356 B-T6 356 C
-	E 644 612 832 00	sticker for 644.612.802.00		1	M CARRERA 2000
44	644 628 091 00	retaining strap		1	356 B-T6 356 C
45	N 011 524 7	washer		2	356 B-T6 356 C

Pos	Part Number	Name	Remarks	Qty	Model
46	900 076 010 02	hexagon nut		2	356 B-T6 356 C
47	999 652 102 10	cable plug		12	
-	E 999 652 103 10	cable connection		9	
(48)	644 613 101 06	ignition starter lock with keys		1	356 B-T5
48	644 613 101 06	ignition starter switch with keys		1	356 B-T6
(49)	644 613 901 01	key state lock number		2	356 B-T5
-	E 644 613 901 02	key state lock number		1	356 B-T6 356 C CARRERA 2000
-	644 613 901 10	blank key		1	356 B-T6 356 C CARRERA 2000
50	644 613 211 05	light switch		1	356 B-T5
(50)	E 644 613 212 01	light switch 12 VOLT		1	M CARRERA 2000
-	756 631 701 00	indicator light for high beam blue KIRSTEN 4812/2		1	CARRERA ABARTH 692/3/3A
51	644 552 821 01	knob for 644.613.211.05 644.613.511.00 644.613.512.00		2	
52	E 644 613 511 00	wiper switch 6 VOLT		1	356 B-T6 356 C
(52)	E 644 613 512 00	wiper switch 12 VOLT		1	M CARRERA
-	E 644 613 503 00	switch for fog headlamp with indicator light yellow		1	356 B-T6
-	E 644 613 931 00	knob for 644.613.503.00		1	
-	E 644 613 505 00	nut for 644.613.211.05 644.613.511.00 644.613.512.00 644.613.503.00		1	
-	756 631 702 00	indicator light for direction indicator light red KIRSTEN 4812/2		1	CARRERA ABARTH 692/3/3A
(53)	E 644 652 101 01	cigarette lighter		1	356 B
(53)	E 644 652 102 00	cigarette lighter 12 VOLT	-63	1	356 B:M CARRERA 1600 CARRERA 2000 GT
53	E 644 652 101 02	cigarette lighter 6 VOLT		1	356 C
(53)	E 644 652 102 02	cigarette lighter 12 VOLT		1	356 C:M CARRERA 2000
54	E 644 652 121 00	connector 6 VOLT		1	356 C
(54)	E 644 652 122 00	connector 12 VOLT		1	356 C:M CARRERA 2000
55	E 644 652 115 00	glower 6 VOLT		1	356 C
(55)	644 652 112 00	glower 12 VOLT		1	356 C:M CARRERA 2000
56	644 552 821 01	knob		1	356 C
57	901 613 801 00	connector		1	M
58	E 644 613 501 00	switch 4-pole for windscreen washer system		1	
-	E 644 613 502 00	switch 5-pole for windscreen washer system electric		1	M
-	E 644 613 501 01	switch 2-pole for fog headlamp		1	M

Pos	Part Number	Name	Remarks	Qty	Model
59	644 552 831 00	knob for 644.613.501.00 644.613.501.01 644.613.502.00		1	
-	E 644 628 128 00	nut for 644.613.501.00 644.613.501.01 644.613.502.00		1	
-	E 644 628 127 00	nut for 644.613.501.00 644.613.501.01 644.613.502.00		1	
60	E 644 613 342 00	flasher relay 6 VOLT		1	
(60)	644 613 342 10	flasher relay 12 VOLT		1	M/CARRERA 2000 GT
61	E 644 631 107 03	connector		1	
62	E 644 631 108 00	spacer		1	
63	PCG 615 101 00	relay horn		1	
(63)	PCG 615 101 10	relay horn 12 VOLT		1	M/CARRERA 2000 GT
64	PCG 615 101 00	relay headlight flasher		1	
(64)	644 615 104 00	relay headlight flasher 12 VOLT		1	M/CARRERA 2000 GT
(65)	644 615 601 00	door contact switch		2	356 B-T5
65	E 644 615 601 06	door contact switch not for -ROADSTER-		2	356 B-T6 356 C
66	E 644 616 131 01	socket dashboard		1	
-	E 901 632 301 00	glove compartment light		1	356 C:M CARRERA 2000
67	644 632 101 01	interior light with switch please state the colour		2	356 B-T5: COUPE
(67)	644 632 101 01	interior light with switch please state the colour		1	356 B-T5: CABRIO HARDTOP
(67)	644 632 101 03	interior light with switch		2	356 B-T6: COUPE
(67)	644 632 101 03	interior light with switch		1	356 B-T6: CABRIO HARDTOP 356 C
68	901 632 101 28	interior light lateral upper		2	356 C: CARRERA 2000 COUPE -REUTTER-
-	E 644 632 153 00	desk pad for interior light		2	356 C: CARRERA 2000 COUPE -REUTTER-
69	644 631 403 00	rear light	/L	1	
(69)	644 631 404 00	rear light	/R	1	
70	E 644 612 331 00	ground strap		2	
71	644 631 423 01	trim frame		2	
72	E 644 631 471 00	cross-recess screw		4	
73	E 644 631 473 00	rubber washer		4	
74	644 631 421 00	lens for 644.631.403.00		1	(USA)
(74)	644 631 422 00	lens for 644.631.404.00		1	(USA)
75	644 631 491 01	rubber base		2	
76	644 631 451 00	support frame		2	
77	644 631 419 00	rubber cap		4	
78	E 644 631 475 00	spacer		6	
79	E 644 631 601 05	license plate light complete		2	
-	E 644 631 601 16	license plate light		2	CARRERA 2000 GT

Pos	Part Number	Name	Remarks	Qty	Model
-	756 631 601 00	license plate light - HELLA K 28/4 -		2	CARRERA ABARTH 692/3/3A
80	644 631 605 05	glass with frame and gasket		2	
81	900 148 005 02	oval-head screw AM 4 X 12		4	
82	644 631 611 05	glass		2	
83	644 631 614 05	rubber seal		2	
84	644 631 615 05	rubber base		2	
85	E 644 631 631 05	back-up light complete		1	
-	E 644 631 631 06	back-up light complete yellow		1	(F)
86	E 644 631 637 05	trim frame		1	
87	900 148 006 02	cross-recess screw AM 4 X 18		2	
88	644 631 641 05	glass		1	
-	E 644 631 641 06	glass		1	(F)
(89)	644 631 644 05	sealing frame		1	
90	644 631 645 05	rubber plate		1	
91	900 015 004 00	oval-head screw AM 4 X 18		1	
92	N 042 122 2	shake-proof washer J 4,3		2	
93	E 644 631 642 05	threaded plate		2	
94	E 999 702 034 50	rubber sleeve 6 X 11 X 8		1	
95	644 731 501 00	reflector complete not for (USA)(B)(S)	/L/R	2	
96	644 731 501 10	reflector		2	(USA)(B)
97	E 644 731 507 05	bracket for 644.731.501.10	/L	1	
(97)	E 644 731 508 05	bracket for 644.731.501.10	/R	1	
98	E 644 731 513 05	rubber washer for 644.731.501.10		2	
99	E 644 731 515 05	nut for 644.731.501.10		2	
100	E 644 731 517 05	rubber seal for 644.731.501.10	/L	1	
(100)	E 644 731 518 05	rubber seal for 644.731.501.10	/R	1	
101	N 012 007 2	lock ring A 6		2	
102	900 076 011 02	hexagon nut M 6		2	
103	111 971 959	flat receptacle 0,5 X 1,5		X	
(103)	999 652 106 02	flat receptacle 0,2 X 2,5		X	
(103)	N 017 491 8	flat receptacle 2,5		X	
(103)	N 017 494 3	flat receptacle 4,2 X 6,0		X	
(104)	E 999 652 116 10	flat receptacle 2,5 cable guide lateral		X	
105	E 999 652 115 10	flat plug 0,5 X 2,5		X	
106	999 652 122 10	multiple plug connector		X	
107	999 652 119 40	connector housing		X	
108	E 999 652 120 40	insulating sleeve		X	
		bulb			356 B

Pos	Part Number	Name	Remarks	Qty	Model
-	E 900 631 009 90	bulb 6V 45/40W for headlamp 644.631.101.02	/LL	2	
-	E 900 631 013 90	bulb 6V 35/35W for headlamp 644.631.101.00	/RL	2	
-	900 631 109 90	bulb 12V 45/40W for headlamp 644.631.101.02	/LL	2	M CARRERA 2000 GT
-	E 900 631 113 90	bulb 12V 35/35W for headlamp 644.631.101.00	/RL	2	
-	E 900 631 003 90	bulb 6V 4W for headlamp 644.631.101.02 644.631.101.00 and direction indicator light	/V	2	(USA)
-	900 631 103 90	bulb 12V 4W for headlamp 644.631.101.02 644.631.101.00 and direction indicator light	/V	2	M/CARRERA 2000 GT (USA)
-	E 900 631 012 90	bulb 6V 35W for fog headlamp		2	M
-	E 900 631 112 90	bulb 12V 35W for fog headlamp		2	M CARRERA 2000
-	900 631 007 90	bulb 6V 18W for position light and rear light		4	
-	N 017 731 2	bulb 12V 18W for position light and rear light		4	M/CARRERA 2000 GT
-	E 900 631 005 90	bulb 6V 5W for rear light		2	
-	900 631 105 90	bulb 12V 5W for fog headlamp		2	M/CARRERA 2000 GT
-	900 631 007 90	bulb 6V 18W for direction indicator light		2	(I)(AUS)
-	N 017 731 2	bulb 12V 18W for direction indicator light		2	(I) M/CARRERA 2000 GT
-	E 900 631 008 90	bulb 6V 18/5W for brake light		2	(I)(AUS)
-	N 017 737 2	bulb 12V 18/5W for brake light		2	(I) M/CARRERA 2000 GT
-	E 900 631 003 90	bulb 6V 4W for direction indicator light		2	(I)
-	900 631 103 90	bulb 12V 4W for direction indicator light		2	(I) M/CARRERA 2000 GT
-	900 631 004 90	bulb 6V 5W for license plate light		2	
-	900 631 104 90	bulb 12V 5W for license plate light		1	M/CARRERA 2000 GT

Pos	Part Number	Name	Remarks	Qty	Model
-	900 631 010 90	bulb 6V 25W		1	
-	900 631 010 90	bulb 6V 21W for back-up light		1	
-	E 900 631 110 90	bulb 12V 25W for back-up light		1	M/CARRERA 2000 GT
-	900 631 006 90	linolite lamp 6V 10W for interior light		2	COUPE -REUTTER- COUPE -KARMANN-
-	900 631 006 90	linolite lamp 6V 10W for interior light		1	CABRIO HARDTOP
-	900 631 106 90	linolite lamp 12V 10W for interior light		2	M CARRERA 2000 GT COUPE -REUTTER- COUPE -KARMANN-
-	900 631 106 90	linolite lamp 12V 10W for interior light		1	M CARRERA 2000 GT CABRIO HARDTOP
-	900 631 002 90	bulb 6V 0,6W for speedometer and tachometer		6	
-	900 631 102 90	bulb 12V 2W for speedometer and tachometer		7	M/CARRERA 2000 GT
-	900 631 002 90	bulb 6V 1,2W for tachometer and instrument cluster		4	356 B-T6: 1600 S/S90 1600 C/SC
-	900 631 102 90	bulb 12V 2W for instrument cluster and clock		4	M/CARRERA GT
-	900 631 002 90	bulb 6V 1,2W for clock not for -ROADSTER-		1	
-	900 631 002 90	bulb 6V 1,2W for switch fog headlamp		1	M
-	900 631 102 90	bulb 12V 2W for switch fog headlamp		1	M

- -- E N D -- -

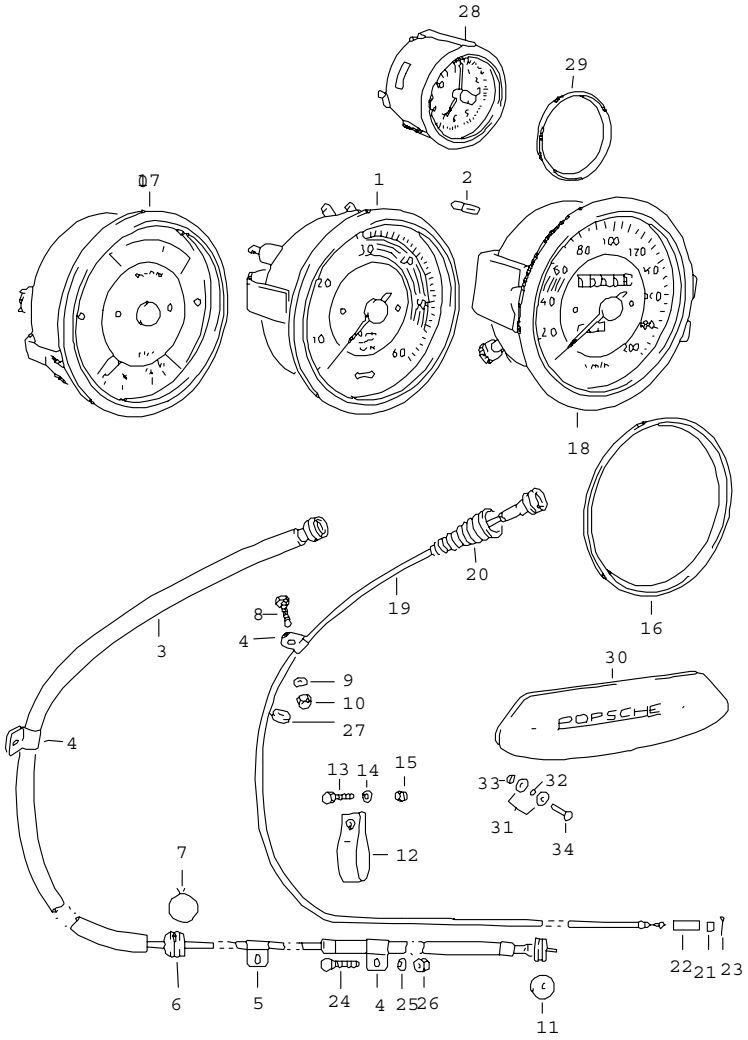

Pos	Part Number	Name	Remarks	Qty	Model
		instruments mechanical			
1	E 644 741 301 03	tachometer UPM 600 - 6 000 red UPM 4 500 - 5 000		1	1600
(1)	E 644 741 301 07	tachometer UPM 600 - 6 000 red UPM 5 000 - 5 500		1	1600 S
(1)	E 644 741 301 08	tachometer UPM 600 - 6 000 red UPM 5 500 - 6 000		1	1600 S 90
(1)	E 718 741 301 01	tachometer $ 115 UPM 1 000 - 10 000		1	CARRERA ABARTH 692/3/3A
2	900 631 002 90	bulb 6 V - 0,6 W		3	
(2)	900 631 002 90	bulb 6 V - 1,2 W		1	
(1)	E 644 741 302 05	tachometer UPM 800 - 8 000 red UPM 6 000 - 7 500		1	356 B-T5: CARRERA GT
(1)	E 644 741 302 06	tachometer UPM 800 - 8 000 red UPM 6 000 - 7 500		1	356 B-T6: CARRERA GT
(2)	900 631 102 90	bulb 12 V - 2 W		1	CARRERA GT
3	644 741 311 01	pliable shaft 4 000 MM		1	1600 /S/S90
-	644 741 311 01	drive shaft 4 000 MM		1	1600 /S/S90
(3)	644 741 311 01	drive shaft 3 650 MM		1	CARRERA GT
(3)	644 741 311 01	drive shaft VDO 4 000 MM		1	CARRERA ABARTH 692/3/3A
4	999 511 036 02	clip		2 1	 CARRERA
5	E 356 49 648	clip		1	

Pos	Part Number	Name	Remarks	Qty	Model
6	644 025 622 01	rubber sleeve		1	
7	644 025 682 00	clamp		1	
8	900 075 003 01	hexagon-head bolt M 5 X 10		1	
9	N 012 225 2	spring washer B 5		2	
10	900 076 006 02	hexagon nut M 5		2	
11	--- --- --- --	not available		X	
12	999 706 009 80	suspension strap		1	
13	E 900 075 018 01	hexagon-head bolt M 6 X 30		1	
14	N 012 226 5	spring washer B6		1	
15	900 076 010 02	hexagon nut M 6		1	
16	E 999 704 126 50	ring $ 95 MM		3	
17	E 644 741 501 01	instrument cluster 6 V		1	356 B-T5
(17)	644 741 502 01	instrument 12 V		1	356 B-T5
(17)	E 644 741 501 02	instrument cluster 6 V F >> 121 223 F >> 211 174 F >> 157 071		1	356 B-T6 COUPE -REUTTER- COUPE -KARMANN- CABRIO HARDTOP
(17)	E 644 741 502 06	instrument cluster 12 V F >> 121 223 F >> 211 174 F >> 157 071		1	356 B-T6 COUPE -REUTTER- COUPE -KARMANN- CABRIO HARDTOP
(17)	E 644 741 501 03	instrument cluster 6 V fuel tank 52 L + 70 L F 121 224 >> F 211 175 >> F 157 072 >> not for F 121 253 F 121 304		1	356 B-T6 COUPE -REUTTER- COUPE -KARMANN- CABRIO HARDTOP COUPE -REUTTER- COUPE -REUTTER-
(17)	E 644 741 502 07	instrument cluster 12 V fuel tank 52 L + 70 L F 121 224 >> F 211 175 >> F 157 072 >> not for F 121 253 F 121 304		1	356 B-T6 COUPE -REUTTER- COUPE -KARMANN- CABRIO HARDTOP COUPE -REUTTER- COUPE -REUTTER-
(17)	644 741 502 01	instrument 12 V fuel tank 110 L		1	CARRERA 2000 GT
(17)	E 644 741 502 11	instrument cluster 12 V fuel tank 110 L		1	CARRERA 2000 GT
17	E 644 741 501 04	instrument cluster 6 V fuel tank 52 L + 70 L		1	356 C
(17)	E 644 741 502 08	instrument cluster 12 V fuel tank 52 L + 70 L		1	356 C
(17)	E 644 741 501 11	instrument cluster 6 V fuel tank 110 L		1	356 C

Pos	Part Number	Name	Remarks	Qty	Model
(17)	E 644 741 501 05	instrument cluster 6 V fuel tank 52 L	/RL	1	356 C
(17)	644 741 502 01	instrument cluster 12 V fuel tank 52 L	/RL	1	356 C
(2)	900 631 002 90	bulb 6 V - 1,2 W		3	
(2)	900 631 102 90	bulb 12 V - 2 W		3	
18	E 644 741 101 03	speedometer KM/H 0 - 200		1	
(18)	E 644 741 101 13	speedometer MPH 0 - 120		1	
(18)	E 644 741 102 06	speedometer KM/H 0 - 250		1	CARRERA
(18)	E 644 741 102 16	speedometer MPH 0 - 160		1	CARRERA
(2)	900 631 002 90	bulb 6 V - 0,6 W		2	
(2)	900 631 102 90	bulb 12 V - 2 W		1	
19	644 741 111 00	drive shaft	/LL	1	
(19)	E 644 741 112 00	drive shaft	/RL	1	
20	356 23 204	sealing sleeve		X	
21	644 741 241 00	sleeve		1	
22	644 741 241 00	sleeve		1	
23	E 900 021 006 00	roll pin 2 X 10		1	
24	N 010 207 6	hexagon-head bolt M 5 X 12		X	
25	N 012 005 3	lock ring B 5		X	
26	900 076 004 02	hexagon nut M 5		X	
27	999 702 020 50	rubber sleeve 8 X 12 X 9		1	
28	E 644 741 701 10	clock 6 V		1	356 B-T5
(28)	E 644 741 701 11	clock 6 V		1	356 B-T6 356 C
(2)	900 631 002 90	bulb 6 V - 1,2 W		1	
(28)	E 644 741 702 10	clock 12 V		1	356 B-T5: CARRERA
(28)	E 644 741 702 16	clock 12 V		1	356 B-T6: 356 C: CARRERA
(2)	900 631 102 90	bulb 12 V - 2 W		1	
29	E 999 704 124 50	ring $ 50 MM		1	
30	644 552 431 00	cover radio porsche lettering		1	
31	E 644 025 661 00	washer		4	
32	E 644 025 601 00	rubber washer		2	
33	999 507 212 01	speed nut		2	
34	E 900 055 004 12	rivet 3 X 15 chrome		2	
-	E 644 741 245 00	spacer tube drive shaft speedometer not for - CARRERA GT -	/RL	1	
-	999 702 119 50	rubber sleeve 10 X 14 X 8 not for - CARRERA GT -	/RL	1	
-	999 706 009 80	suspension strap drive shaft speedometer		1	

Pos	Part Number	Name	Remarks	Qty	Model
-	E 644 741 901 00	bulb holder instruments single pole F >> 121 223 F >> 211 174 F >> 157 071		4	 COUPE -REUTTER- COUPE -KARMANN- CABRIO HARDTOP
-	999 632 007 00	bulb holder instruments single pole F 121 224 >> F 211 175 >> F 157 072 >> not for F 121 253 F 121 304		9	 COUPE -REUTTER- COUPE -KARMANN- CABRIO HARDTOP COUPE -REUTTER- COUPE -REUTTER-
-	E 644 741 902 00	bulb holder instrument cluster 2-pole F >> 121 223 F >> 211 174 F >> 157 071		2	 COUPE -REUTTER- COUPE -KARMANN- CABRIO HARDTOP
-	E 644 741 902 01	bulb holder instrument cluster 2-pole F 121 224 >> F 211 175 >> F 157 072 >> not for F 121 253 F 121 304 - -- E N D -- -		2	 COUPE -REUTTER- COUPE -KARMANN- CABRIO HARDTOP COUPE -REUTTER- COUPE -REUTTER-

Pos	Part Number	Name	Remarks	Qty	Model

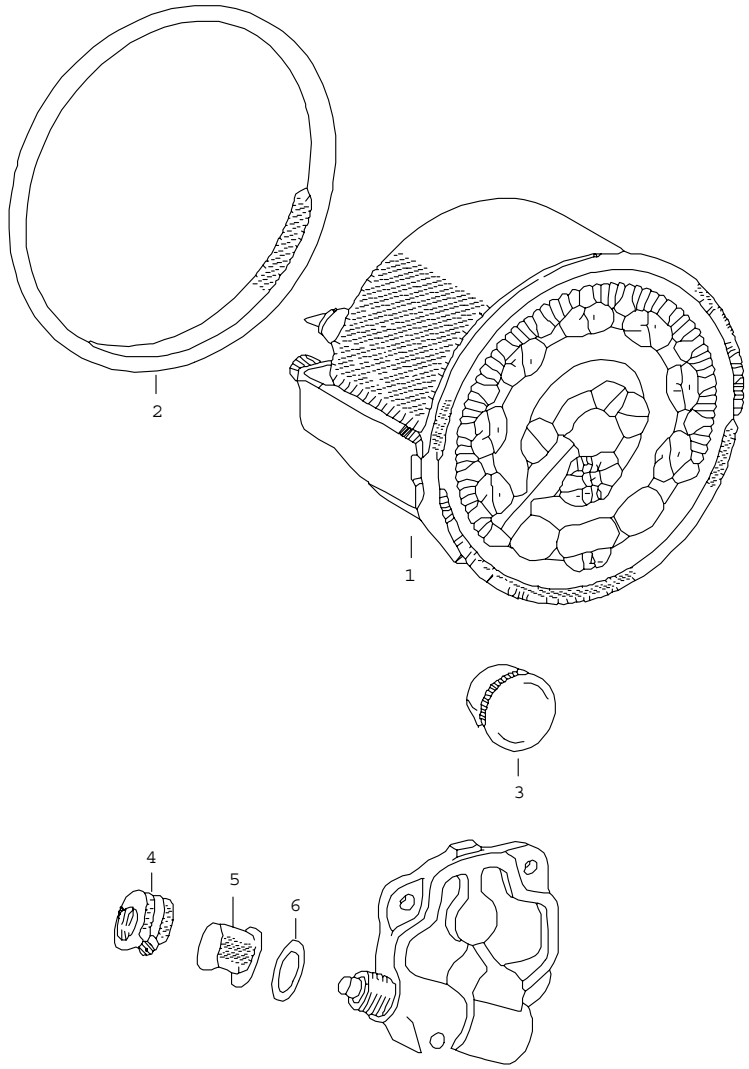

Pos	Part Number	Name	Remarks	Qty	Model
		tachometer electric			1600 /S/S90
		for subsequent installat. for engine TYP 616			
1	E 644 741 303 02	tachometer 6 V		1	
(1)	E 644 741 304 02	tachometer 12 V		1	
2	E 999 704 126 50	ring $ 95		1	
3	E 999 703 017 40	plug		1	
4	E 999 104 003 30	union nut		1	
5	E 539 07 132	cap		1	
6	369 05 707	washer		1	
		- -- E N D -- -			

Model	Year	MG	SG	Illustration	Restrictions	Update			
356	65	9	06	906-10		194	13:29	27.10.2005	PORSCHE PET PORSCHE

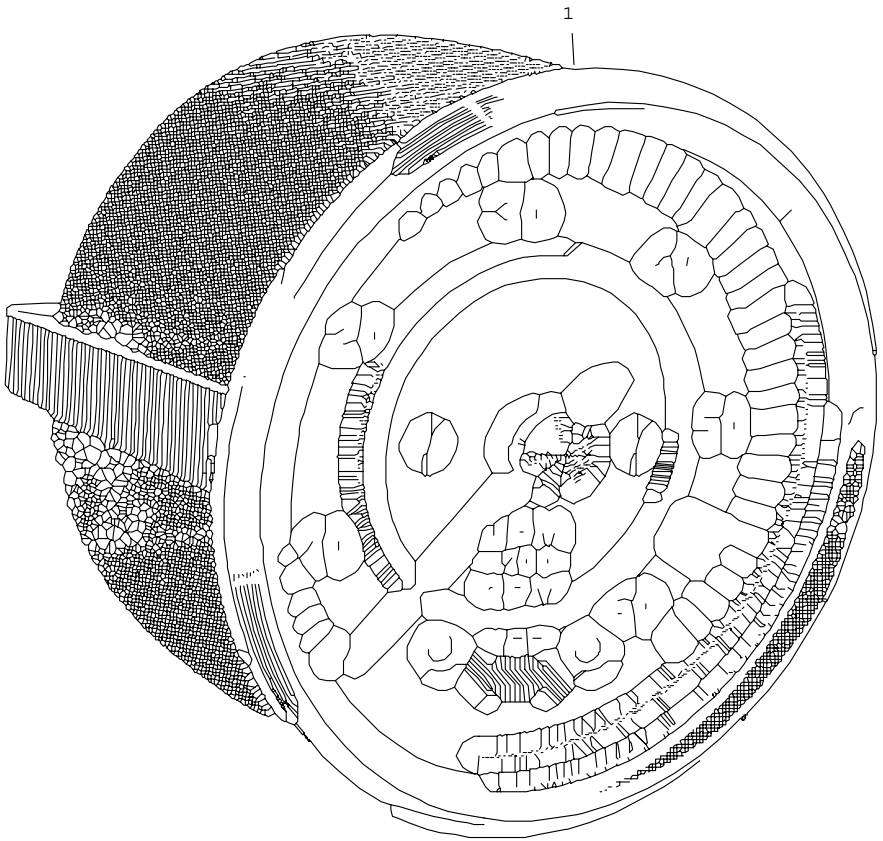

Pos	Part Number	Name	Remarks	Qty	Model
		tachometer electric			
1	E 644 741 303 00	tachometer 6 V		1	1600 C
(1)	E 644 741 304 00	tachometer 12 V		1	1600 C
(1)	E 644 741 303 01	tachometer 6 V		1	1600 SC
(1)	E 644 741 304 01	tachometer 12 V		1	1600 SC
(1)	E 644 741 304 10	tachometer 12 V for engine 587/1 + 587/2		1	CARRERA 2000
-	E 999 703 017 40	plug		1	

- -- E N D -- -

Model	Year	MG	SG	Illustration	Restrictions	Update	13:30	27.10.2005	PORSCHE PET PORSCHE
356	65	9	06	906-15		194			

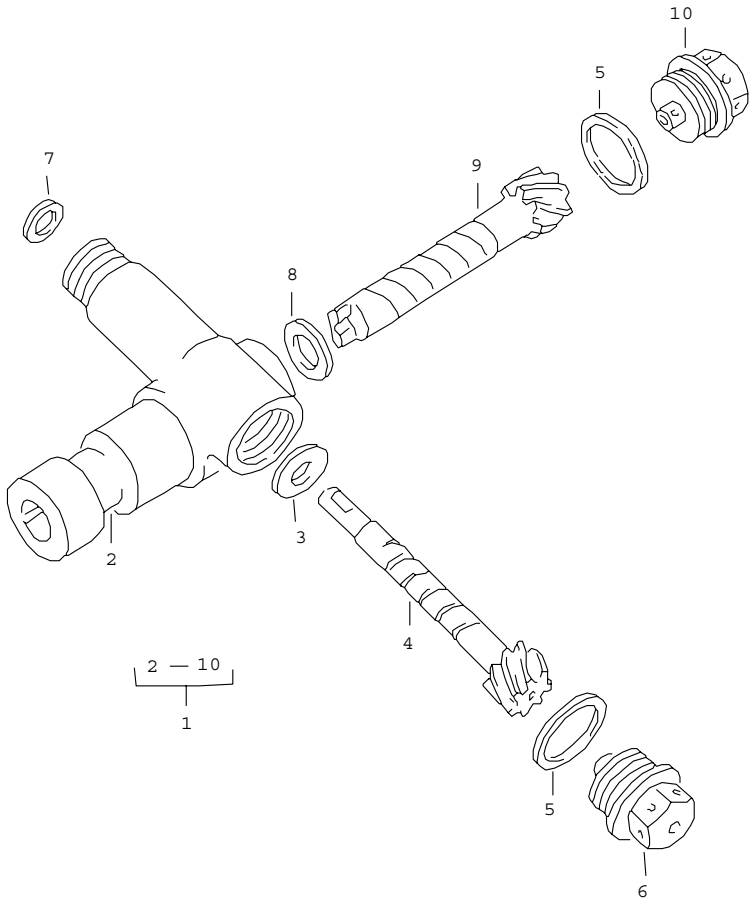

Pos	Part Number	Name	Remarks	Qty	Model
		driving mechanism tachometer			CARRERA
1	E 692 118 015 00	driving mechanism tachometer complete		1	587/1/2
2	E 692 118 101 00	housing		1	
3	369 05 718	thrust washer 0,8 MM		X	
(3)	369 05 719	thrust washer 0,6 MM		X	
(3)	369 05 720	thrust washer 0,5 MM		X	
4	E 547 18 107	drive shaft		1	
(4)	E 547 118 105 00	drive shaft for - ABARTH-CARRERA-		1	692/3/3A
5	900 123 010 30	sealing ring aluminium A 20 X 24		2	
6	E 369 05 703	pressure screw		1	
7	E 369 05 704 1	sealing ring felt		1	
8	E 547 18 103	thrust washer 0,8 MM		X	
(8)	E 547 18 104	thrust washer 0,6 MM		X	
(8)	E 547 18 105	thrust washer 0,5 MM		X	
9	E 547 18 108	pinion shaft		1	
(9)	E 547 118 107 00	pinion shaft for - ABARTH-CARRERA-		1	692/3/3A
10	E 547 18 106	pressure screw		1	
-	E 547 09 217	clamping bow distributor		1	
-	900 028 008 01	spring washer B 6		1	
-	E 900 074 101 02	hexagon-head bolt M 6X20		1	

Model	Year	MG	SG	Illustration	Restrictions	Update			
356	65	9	06	906-15		194	13:30	27.10.2005	PORSCHE PET PORSCHE

Pos	Part Number	Name	Remarks	Qty	Model	Pos	Part Number	Name	Remarks	Qty	Model
-	E 692 118 191 00	spacer ring		1							
-	900 028 010 01	spring washer B 8		1							
-	502 08 310	hexagon nut		1							
		- -- E N D -- -									

TR203

THIS PARTS CATALOGUE CONTAINS ALL ORDER INFORMATION OF
TYPES 356-B FROM MODEL YEAR 1960 - 1963
356-C FROM MODEL YEAR 1964 - 1965

IT IS AVAILABLE IN TWO EDITIONS IN THE FOLLOWING LANGUAGES:

EDITION
USA, CANADA - *

EDITION
ALL OTHER COUNTRIES - GERMAN

* - ENGLISH

- FRENCH

- ITALIAN

- SPANISH

UPDATING IS BEING PERFORMED BY CHANGING OF UPDATE.

THE EDITION CAN BE RECOGNIZED BY THE CURRENT NO.
IN THE BOTTOM LINE OF SUBJECT UPDATE.

THE PREVIOUS UPDATE SHOULD NO LONGER BE USED.

ALL ILLUSTRATIONS ARE SUBJECT TO CHANGE WITHOUT OBLIGATION.

WE RESERVE THE RIGHT TO SUPPLY A SUBSEQUENTLY
PRODUCED COMPONENT, ON WHICH ADDITIONAL WORK
IS NECESSARY, INSTEAD OF THE COMPONENT LISTED IN
THE CATALOGUE

Model	Year	MG	SG	Illustration	VIN No.	Update	13:30	27.10.2005
356	65	9	06	906-15		194		

FR203

VEHICLE TYPE		MY	VEHICLE IDENT.NR.	ENGINE TYPE
356 B	CARRERA GS	59		692/2
356 B	COUPE	60	108918>110237	616/1/2/1600/S
356 B	CABRIO	60	152476>152943	616/1/2/1600/S
356 B	ROADSTER	60	086831>087391	616/1/2/1600/S
356 B	COUPE	60	110238>114650	616/1/2/7/1600/S
356 B	COUPE	60	110238>114650	/1600 S-90
356 B	CABRIO	60	152944>154560	616/1/2/7/1600/S
356 B	CABRIO	60	152944>154560	/1600 S-90
356 B	ROADSTER	60	087392>088920	616/1/2/7/1600/S
356 B	ROADSTER	60	087392>088920	/1600 S-90
356 B	CARRERA GT	60		692/3
356 B	COUPE	61	114651>117476	616/1/2/7/1600/S
356 B	COUPE	61	114651>117476	/1600 S-90
356 B	CABRIO	61	154561>155569	616/1/2/7/1600/S
356 B	CABRIO	61	154561>155569	/1600 S-90
356 B	HARDTOP -KARMANN-	61	200001>201048	616/1/2/7/1600/S
356 B	HARDTOP -KARMANN-	61	200001>201048	/1600 S-90
356 B	ROADSTER	61	088921>089483	616/1/2/7/1600/S
356 B	ROADSTER	61	088921>089483	/1600 S-90
356 B	CARRERA GT/ABARTH GLT	61		692/3A
356 B	COUPE	62	117601>121099	616/1/12/7/1600/S
356 B	COUPE	62	117601>121099	/1600 S-90
356 B	COUPE -KARMANN-	62	210001>210899	616/1/12/7/1600/S
356 B	COUPE -KARMANN-	62	210001>210899	/1600 S-90
356 B	CABRIO	62	155601>156999	616/1/12/7/1600/S
356 B	CABRIO	62	155601>156999	/1600 S-90
356 B	HARDTOP -KARMANN-	62	201601>202299	616/1/12/7/1600/S
356 B	HARDTOP -KARMANN-	62	201601>202299	/1600 S-90
356 B	ROADSTER	62	089601>089800	616/1/12/7/1600/S
356 B	ROADSTER	62	089601>089800	/1600 S-90
356 B	CARRERA GS	62		587/1/2000
356 B	COUPE	63	121100>125239	616/1/12/7/1600/S
356 B	COUPE	63	121100>125239	/1600 S-90
356 B	COUPE -KARMANN-	63	210900>214400	616/1/12/7/1600/S
356 B	COUPE -KARMANN-	63	210900>214400	/1600 S-90
356 B	CABRIO	63	157000>158700	616/1/12/7/1600/S
356 B	CABRIO	63	157000>158700	/1600 S-90
356 B	CARRERA GS	63		587/1/2000
356 B	CARRERA GT	63		587/2/2000
356 C	COUPE	64	126001>131927	616/15/16/1600 C/SC
356 C	COUPE -KARMANN-	64	215001>221482	616/15/16/1600 C/SC
356 C	CABRIO	64	159001>161577	616/15/16/1600 C/SC
356 C	CARRERA GS	64		587/2/2000
356 C	COUPE	65	138928>	616/15/16/1600 C/SC
356 C	COUPE -KARMANN-	65	221483>	616/15/16/1600 C/SC
356 C	CABRIO	65	161578>	616/15/16/1600 C/SC

Model	Year	MG	SG	Illustration	VIN No.	Update	13:31	27.10.2005
356	65	9	06	906-15		194		

MR203

VEHICLE TYPE		TYPE	MY	ENGINE NO.	TECNICAL DATA
356 B	CARRERA GS	692/2	59	P93001>P93062	4ZYL/1,6L /77 KW
356 B	CARRERA GS	692/2	59	P93100>P93138	4ZYL/1,6L /77 KW
356 B	COUPE/CABRIO/ROADSTER	616/1	60	600101>604700	4ZYL/1,6L /44 KW
356 B	COUPE/CABRIO/ROADSTER	616/2	60	084771>088320	4ZYL/1,6L /55 KW
356 B	COUPE/CABRIO/ROADSTER	616/7	60	800101>802000	4ZYL/1,6L /66 KW
356 B	CARRERA GT	692/3	60	P95001>P95114	4ZYL/1,6L /85 KW
356 B	COUPE/CABRIO/ROADSTER	616/1	61	604701>606799	4ZYL/1,6L /44 KW
356 B	COUPE/CABRIO/ROADSTER	616/2	61	088321>089999	4ZYL/1,6L /55 KW
356 B	COUPE -KARMANN-	616/2	61	085001>085670	4ZYL/1,6L /55 KW
356 B	COUPE/CABRIO/ROADSTER	616/7	61	802001>803999	4ZYL/1,6L /66 KW
356 B	CARRERA GT/ABARTH GLT	692/3A	61	P96001>P96050	4ZYL/1,6L /99 KW
356 B	COUPE/CABRIO/ROADSTER	616/1	62	606801>608900	4ZYL/1,6L /44 KW
356 B	COUPE/CABRIO/ROADSTER	616/12	62	700001>702800	4ZYL/1,6L /55 KW
356 B	COUPE/CABRIO/ROADSTER	616/7	62	804001>805600	4ZYL/1,6L /66 KW
356 B	CARRERA GS	587/1	62	P97001>P97446	4ZYL/2,0L /96 KW
356 B	COUPE/CABRIO	616/1	63	608901>611200	4ZYL/1,6L /44 KW
356 B	COUPE -KARMANN-	616/1	63	600501>600600	4ZYL/1,6L /44 KW
356 B	COUPE/CABRIO	616/12	63	702801>707200	4ZYL/1,6L /55 KW
356 B	COUPE -KARMANN-	616/12	63	700501>701200	4ZYL/1,6L /55 KW
356 B	COUPE/CABRIO	616/7	63	805601>807400	4ZYL/1,6L /66 KW
356 B	COUPE -KARMANN-	616/7	63	800501>801000	4ZYL/1,6L /66 KW
356 B	CARRERA GS	587/1	63	P97001>P97446	4ZYL/2,0L /96 KW
356 B	CARRERA GS/GT	587/2	63	P98005>P98032	4ZYL/2,0L /118KW
356 C	COUPE/CABRIO	616/15	64	710001>716804	4ZYL/1,6L /55 KW
356 C	COUPE -KARMANN-	616/15	64	730001>733027	4ZYL/1,6L /55 KW
356 C	COUPE/CABRIO	616/16	64	810001>813562	4ZYL/1,6L /70 KW
356 C	COUPE -KARMANN-	616/16	64	820001>821701	4ZYL/1,6L /70 KW
356 C	COUPE/CABRIO	616/15	65	716805>	4ZYL/1,6L /55 KW
356 C	COUPE/CABRIO	616/15	65	733028>	4ZYL/1,6L /55 KW
356 C	COUPE/CABRIO	616/16	65	813563>	4ZYL/1,6L /70 KW
356 C	COUPE/CABRIO	616/16	65	821702>	4ZYL/1,6L /70 KW

Model	Year	MG	SG	Illustration	VIN No.	Update	13:31	27.10.2005
356	65	9	06	906-15		194		

GR203

VEHICLE TYPE	TRANSM. TYPE	MY	TRANSMISSION NO.	TECNICAL DATA
356 B COUPE	741	60	32001>34999	4-SPEED
356 B CABRIOLET/HARDTOP				
356 B ROADSTER				
356 B COUPE	644	60	35001>49999	4-SPEED
356 B CABRIOLET/HARDTOP		61		
356 B ROADSTER				
356 B HARDTOP -KARMANN-				
356 B COUPE	741 A	62	50001>70000	4-SPEED
356 B COUPE -KARMANN-		63		
356 B CABRIOLET/HARDTOP				
356 B ROADSTER				
356 B HARDTOP -KARMANN-				
356 C COUPE	741 C	64	70001>86695	4-SPEED
356 C COUPE -KARMANN-		65		
356 C CABRIOLET/HARDTOP				

TR203

LEGENDS AND NOTICES

IN COLUMN -S- STATUS

N	NEW ADDITION
P	PART ALREADY IN PROGRAMME, BUT NEW AT THIS APPLICATION
E	THIS PART NO. IS NO LONGER AVAILABLE FROM PORSCHE
W	DELETED AT THIS APPLICATION, BUT CONTINUED, TO BE CARRIED
A	STOCK TO BE USED UP
U	DELETED WITHOUT REPLACEMENT
*	PART ALSO OR ONLY AVAILABLE IN REPAIR KIT
>	ALSO AVAILABLE IN EXCHANGE

IN COLUMN - ILL. -

1	IDENTIFICATION NO. IN ILLUSTRATION
(1)	PART ONLY SIMILAR AS ILLUSTRATED
-	PART IS NOT ILLUSTRATED

FIG.-NUMBERS FOR WHICH THERE IS SHOWN NO TEXT ARE NOT VALID FOR THIS EDITION OF CATALOGUE

IN COLUMN -PART NUMBER/CODE-

000 000 000 00	PART NUMBER EQUALS ORDERING NO., IF A CODE IS SHOWN, IT WILL HAVE TO BE PART OF ORDERING NUMBER
01C	COLOUR CODE

IN COLUMN -TEXT

INSTALLATION WITH ENGINE OR CHASSIS NUMBER-RANGE

			EXAMPLE:
M 640 0391	>>		FROM ENGINE NO.
F	>>	914043 0391	UP TO CHASSIS NO.

TR203

```
                    IN COLUMN  - A -
                    ----------------

                    IDENTIFICATION LETTER FOR PERIOD OF INSTALLATION
                    THAT IS REPEATED SEVERAL TIMES IN THE CATALOG GROUP.

                    EXPLANATION PLEASE FIND IN TEXT COLUMN OF THE CATALOG GROUP


                    IN COLUMN   - QU -   = NO. OF PIECES
                    ------------------------------------

          1         NUMBER PER APPLICATION

          X         NUMBER AS NEEDED

          *         AVAILABLE ONLY IN RUNNING LENGTHS   1 = 1 METRE


                    IN COLUMN   - MODEL/SYMBOL -
                    ----------------------------

         M650       OPTIONAL EQUIPMENT  -  SEE M-NO. LIST

         -94        LIMITATION OF MODEL YEAR FOR INSTANCE: VALID UP TO
                    END OF MODEL YEAR 1994

        /LL         LHD

        /RL         RHD
                    ---------+
        /V          FRONT    I
                             I
        /H          REAR     I
                             I---> APPLIES TO
        /L          LEFT     I     DIRECTION OF TRAVEL
                             I
        /R          RIGHT    I
                    ---------+

        WW          THE PART CAN BE USED INSTEAD OF THE
                    PRECEDING ONE.
```

TR203

EQUIPMENT BY COUNTRY REGULATIONS
==========

(A)	AUSTRIA
(AUS)	AUSTRALIA
(B)	BELGIUM
(CDN)	CANADA
(CH)	SWITZERLAND
(D)	FEDERAL REPUBLIC OF GERMANY
(DK)	DENMARK
(E)	SPAIN
(F)	FRANCE
(GB)	GREAT BRITAIN
(GR)	GREECE
(HK)	HONGKONG
(I)	ITALY
(J)	JAPAN
(L)	LUXEMBURG
(N)	NORWAY
(NL)	NETHERLANDS
(NZ)	NEW ZEALAND
(P)	PORTUGAL
(RC)	TAIWAN
(S)	SWEDEN
(SA)	SAUDI ARABIA
(SF)	FINLAND
(USA)	UNITED STATES OF AMERICA
(ZA)	SOUTH AFRICA